FIREPOWER
Cabinet Wiring Diagram *(System 6)*

ISSUE NUMBER 3.0 (21 FEB 2007)
CREATED BY: Phil Butcher
www.firepowerpinball.com

BOARD CONNECTIONS:
1 CPU BOARD
2 DRIVER BOARD
3 POWER SUPPLY BOARD
4 MASTER DISPLAY BOARD
5 SLAVE DISPLAY BOARD
6 BACKBOX
7 CABINET
8 PLAYFIELD
9 INSERT BOARD
10 SOUND BOARD
11 NOT ASSIGNED
12 SPEECH MODULE

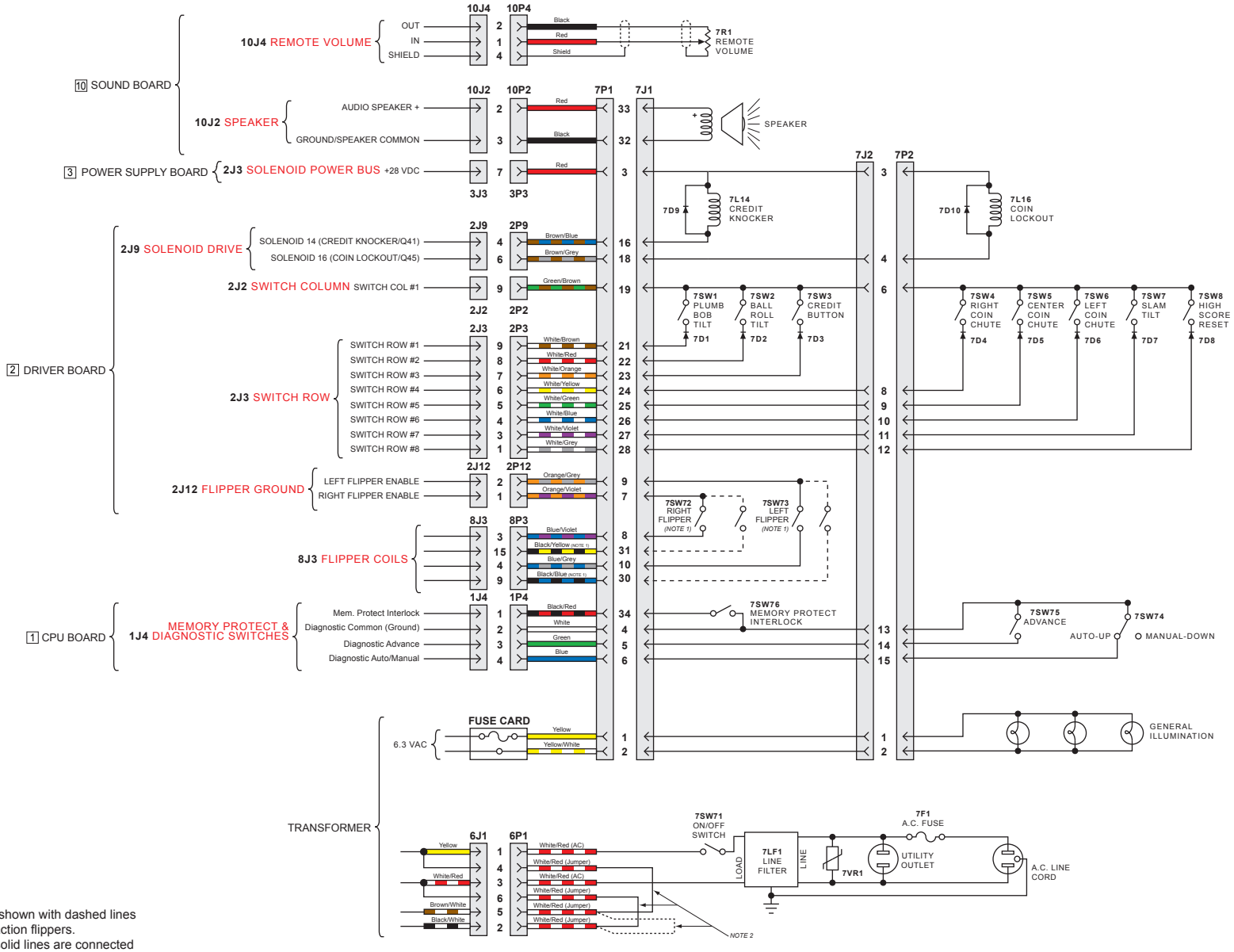

NOTES:
1. Flipper switch contacts and wiring shown with dashed lines are used only in games with dual action flippers.
2. Jumper wires on 6P1 shown with solid lines are connected for 117 VAC operation.
   For 220 VAC operation the one shown with a dashed line is connected. All jumpers are White/Red.