7A

MANUAL TRANSMISSION

Section

1 General information
2 Shift lever and housing - removal and installation
3 Back-up light switch - check and replacement
4 Transmission - removal and installation
5 Transmission overhaul - general information

Reference to other Chapters

Extension housing oil seal (2WD models) - See Chapter 7B
Manual transmission level check - See Chapter 1
Manual transmission lubricant change - See Chapter 1
Transmission mount - check and replacement - See Chapter 7B
Vehicle speed sensor - See Chapter 6

1 General information

The vehicles covered by this manual are equipped with a manual or an automatic transmission. Information on the manual transmission is included in this Part of Chapter 7. Information on the automatic transmission can be found in Part B of this Chapter. Information on the transfer case used on 4WD models can be found in Part C of this Chapter.

Vehicles equipped with a five-speed manual transmission use either an NV 3500 or an NV 4500. Both units are fully synchronized five-speeds with internal shift mechanisms. The NV 3500 transmission is visually identified by its non-removable bellhousing while the NV 4500 transmission has the typical removable bellhousing. Both transmissions are available in two and four wheel drive versions. On 2001 models, there is an optional six-speed manual transmission, the ZF S6-650, which can be identified by its three separate aluminum cases. The front case is the bellhousing, the center houses the shifting mechanism, and the rear case houses the gears. Always refer to the front of this manual to positively identify these transmissions before servicing.

Depending on the cost of having a transmission overhauled, it might be a better idea to replace it with a used or rebuilt unit. Your local dealer or transmission shop should be able to supply information concerning cost, availability and exchange policy. Regardless of how you decide to remedy a transmission problem, you can still save a lot of money by removing and installing the unit yourself.

2 Shift lever and housing - removal and installation

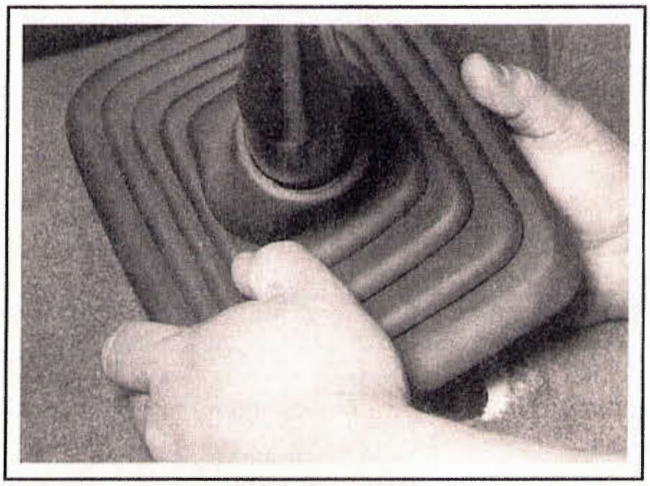

2.4 Remove the retaining screws, then slide the boot and the boot insulator off the shift lever

➧ Refer to illustrations 2.4, 2.5 and 2.6

1 Place the shift lever in Third or Fourth gear.

2 Pry out the plastic retaining clips and remove the trim bezel surrounding the shifter boot.

3 Remove the retaining screws securing the shifter boot to the floor pan.

4 Slide the shift lever boot and the boot insulator off the shift lever (see illustration).

5 Loosen the jam-nut at the base of the shift lever several turns, then unscrew the shift lever from the transmission (see illustration)

6 To remove the shift lever housing from the transmission simply detach the outer four bolts securing the housing to the transmission and pull straight up (see illustration).

➡Note: The transmission must stay in Third or fourth gear during removal and installation of the shift lever housing. DO NOT remove the shift lever mechanism from the shift lever housing as it may void the manufacturers warranty.

7 Installation is the reverse of removal. Be sure to tighten the shift lever housing bolts to the torque listed in this Chapter's Specifications.

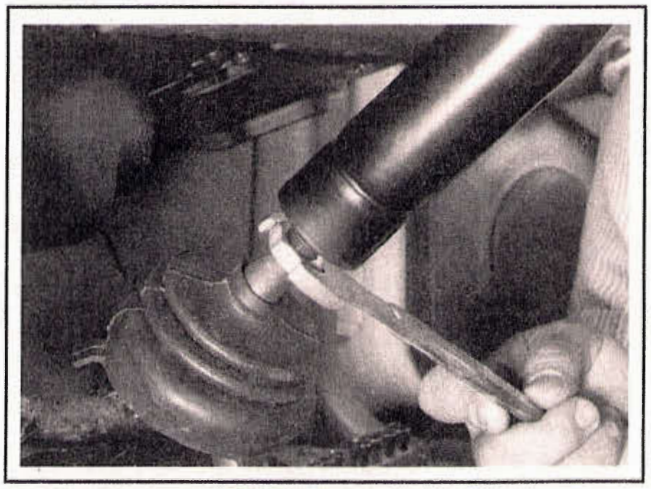

2.5 Loosen the jam-nut at the base of the lever and unscrew the shift lever from the transmission

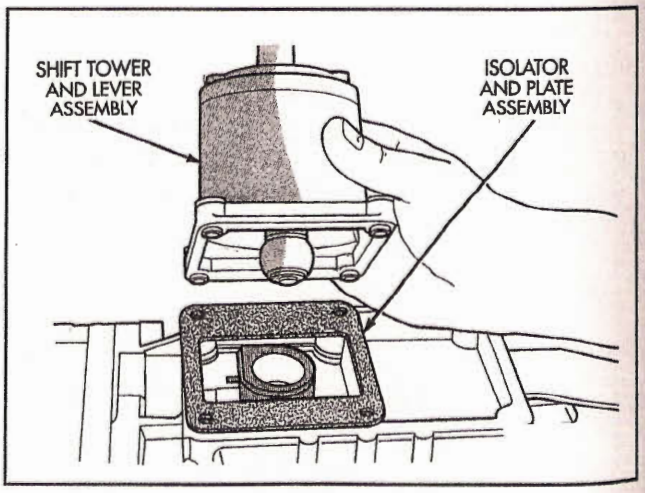

2.6 Pull straight up to remove the shift lever housing

3 Back-up light switch - check and replacement

Refer to illustrations 3.1a and 3.1b

1 The backup light switch is located on the left side of the transmission case on 3500 and 4500 models (see illustrations). On 2001 and later models with ZF six-speed, the switch is at the rear of the last case, at the top-right.

CHECK

2 Turn the ignition key to the On position and move the shift lever to the Reverse position; the back-up lights should go on.

3 If the lights don't go on, check the back-up light fuse first (see Chapter 12). If the fuse is blown, trace the back-up light circuit for a short-circuit condition.

4 If the fuse is okay, raise the vehicle and support it securely on jackstands. Place the shifter in Reverse.

5 Working under the vehicle, unplug the back-up light switch electrical connector. Using an ohmmeter, check for continuity across the terminals of the switch. Continuity should exist. If not, replace the switch.

6 If the switch has continuity, check for voltage at the electrical connector; one of the two terminals should have battery voltage present with the ignition key in the On position. If no voltage is present, trace the circuit between the fuse block and the electrical connector for an open circuit condition.

7 If voltage is present, trace the back-up light circuit between the electrical connector and the back-up light bulbs for an open circuit condition.

➡Note: Although not very likely, the back-up light bulbs could both be burned out; don't rule out this possibility.

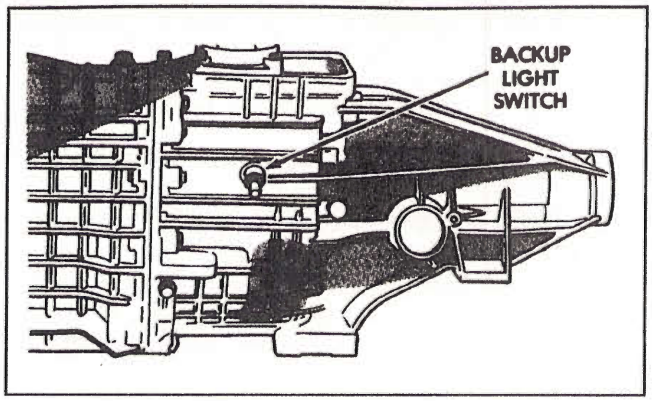

3.1a Location of the back-up light switch (NV 3500 transmission)

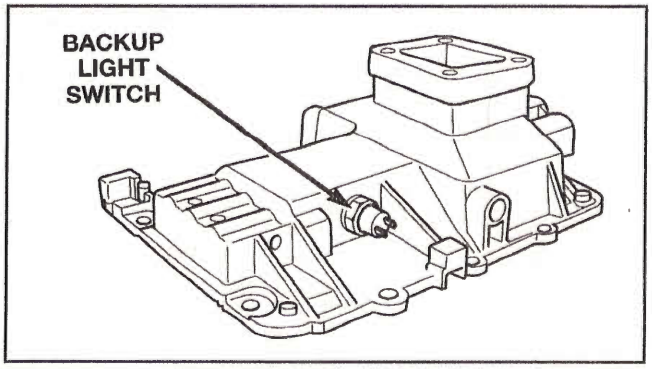

3.1b Location of the back-up light switch (NV 4500 transmission) Specifications

REPLACEMENT

8 Raise the vehicle and support it securely on jackstands, if not already done.

9 Unplug the back-up light switch electrical connector.

10 Unscrew the back-up light switch from the transmission case.

11 Apply RTV sealant or Teflon tape to the threads of the new switch to prevent leakage. Install the switch in the transmission case and tighten it securely. Plug in the electrical connector.

➡Note: The replacement switch may come equipped with thread sealant already applied to the threads. Do not apply RTV sealant or teflon tape to the threads of the new switch if thread sealant has already been applied by the manufacturer.

12 Lower the vehicle and check the operation of the back-up lights.

4 Transmission - removal and installation

REMOVAL

1 Disconnect the cable from the negative terminal of the battery.

CAUTION:

On models equipped with the Theftlock audio system, be sure the lockout feature is turned off before performing any procedure which requires disconnecting the battery (see the front of this manual).

2 Shift the transmission into Third or Fourth.

3 Remove the shift lever and housing assembly (see Section 2).

4 Raise the vehicle sufficiently to provide clearance to easily remove the transmission. Support the vehicle securely on jackstands.

5 Disconnect the electrical connector from the back-up light switch and the vehicle speed sensor. Disengage the wiring harness from the clips on the transmission.

6 Remove the skid plate, if equipped.

7 If the transmission is going to be disassembled, drain the lubricant (see Chapter 1).

8 Remove the driveshaft(s) (see Chapter 8). Use a plastic bag to cover the end of the transmission to prevent fluid loss and contamination.

9 Remove exhaust system components as necessary for clearance (see Chapter 4).

10 On 3500 and 4500 models, Remove the starter motor (see Chapter 5). On ZF six-speed models, unbolt the fuel line brackets at the bellhousing.

11 On 4WD NV 3500 models, remove the transmission-to-transfer case support braces (left and right side) from the transmission and the transfer case. On NV 4500 transmissions remove the flywheel inspec-

tion cover from the lower half of the bellhousing and the transmission support bracket from the right side of the transmission.

12 Remove the plastic bellhousing covers from the left and right side transmission bellhousing if equipped (see illustrations 8.8a and 8.8b in Chapter 7B).

13 Disconnect the clutch hydraulic line from the bellhousing (see Chapter 8).

14 On 4WD models, remove the transfer case shift linkage and the transfer case (see Chapter 7C).

➡Note: The NV 246 (automatic) transfer case is not equipped with external shift linkage.

15 Support the engine from above with an engine hoist, or place a jack (with a block of wood as an insulator) under the engine oil pan. The engine must remain supported at all times while the transmission is out of the vehicle.

16 Support the transmission with a jack - preferably a special jack made for this purpose.

➡Note: These jacks can be obtained at most equipment rental yards.

Safety chains will help steady the transmission on the jack.

17 Raise the engine slightly and disconnect the transmission mount from the extension housing and the center crossmember (see Chapter 7B).

18 Raise the transmission slightly and remove the bolts and nuts attaching the crossmember to the frame rails.

19 Lower the jacks supporting the transmission and engine assembly.

20 Remove the nuts and bolts attaching the transmission to the engine.

21 Make a final check for any wiring or hoses connected to the transmission, then move the transmission and jack toward the rear of the vehicle until the transmission input shaft clears the splined hub in the clutch disc. Keep the transmission level as this is done.

22 Once the input shaft is clear, lower the transmission slightly and remove it from under the vehicle.

23 While the transmission is removed, be sure to remove and inspect all clutch components (see Chapter 8). In most cases, new clutch components should be routinely installed if the transmission is removed.

INSTALLATION

24 Insert a small amount of multi-purpose grease into the pilot bearing in the crankshaft and lubricate the inner surface of the bearing. Also apply a light film of grease on the input shaft splines, input shaft bearing retainer and the release lever/bearing contact points (see Chapter 8).

25 Install the clutch components if removed (see Chapter 8).

26 With the transmission secured to the jack as on removal, raise the transmission into position behind the engine and then carefully slide it forward, engaging the input shaft with the clutch plate hub. Do not use excessive force to install the transmission - if the input shaft does not slide into place, readjust the angle of the transmission so it is level and/or turn the input shaft so the splines engage properly with the clutch.

27 Install the transmission-to-engine bolts and tighten them to the torque listed in this Chapter's Specifications.

⁂ CAUTION:

Don't use the bolts to draw the transmission to the engine. If the transmission doesn't slide forward easily and mate with the engine block, find out why before proceeding.

28 Raise the transmission into place, install the crossmember and attach it to the frame rails. Install the transmission mount between the extension housing and the crossmember. Carefully lower the transmission extension housing onto the mount and the crossmember. When everything is properly aligned, tighten all nuts and bolts securely.

29 Remove the jacks supporting the transmission and the engine.

30 On 4WD models, install the transfer case and shift linkage (if equipped) (see Chapter 7C).

31 Install the various items removed previously, referring to Chapter 8 for the installation of the driveshaft(s) and clutch hydraulic line, Chapter 5 for the starter motor, and Chapter 4 for the exhaust system components.

32 Plug in the electrical connector for the vehicle speed sensor and the back-up light switch. Connect any other wiring attached to the transmission or the transfer case.

33 Remove the jackstands and lower the vehicle.

34 Install the shift lever and housing assembly (see Section 2).

35 Fill the transmission with the specified lubricant to the proper level (see Chapter 1).

36 Connect the cable to the negative terminal of the battery.

37 Road test the vehicle for proper operation and check for leakage.

5 Transmission overhaul - general information

Overhauling a manual transmission is a difficult job for the do-it-yourselfer. It involves the disassembly and reassembly of many small parts. Numerous clearances must be precisely measured and, if necessary, changed with select fit spacers and snap-rings. As a result, if transmission problems arise, it can be removed and installed by a competent do-it-yourselfer, but overhaul should be left to a transmission repair shop. Rebuilt transmissions may be available - check with your dealer parts department and auto parts stores. At any rate, the time and money involved in an overhaul is almost sure to exceed the cost of a rebuilt unit.

Nevertheless, it's not impossible for an inexperienced mechanic to rebuild a transmission if the special tools are available and the job is done in a deliberate step-by-step manner so nothing is overlooked.

The tools necessary for an overhaul include internal and external snap-ring pliers, a bearing puller, a slide hammer, a set of pin punches, a dial indicator and possibly a hydraulic press. In addition, a large, sturdy workbench and a vise or transmission stand will be required.

During disassembly of the transmission, make careful notes of how each piece comes off, where it fits in relation to other pieces and what holds it in place. If you note how each part is installed before removing it, getting the transmission back together again will be much easier.

Before taking the transmission apart for repair, it will help if you have some idea what area of the transmission is malfunctioning. Certain problems can be closely tied to specific areas in the transmission, which can make component examination and replacement easier. Refer to the Troubleshooting Section at the front of this manual for information regarding possible sources of trouble.

Specifications

General

Transmission lubricant type	See Chapter 1

Torque specifications

	Ft-lbs (unless otherwise indicated)
Back-up light switch	
Through 2000	21
2001 and later	27
Bellhousing cover screws	120 in-lbs
Shift lever jam-nut	35
Shift lever housing-to-transmission bolts	15
Transmission mount-to-transmission bolts	
Through 2000	18
2001 and later	37
Transmission mount-to-crossmember nuts	30
Transmission-to-engine bolts	37