12

CHASSIS ELECTRICAL SYSTEM

Section

1 General information
2 Electrical troubleshooting - general information
3 Fuses and fusible links - general information
4 Circuit breakers - general information and check
5 Relays - general information and testing
6 Turn signal and hazard flashers - check and replacement
7 Steering column switches - replacement
8 Ignition switch and key lock cylinder - replacement
9 Instrument panel switches - replacement
10 Fuel, temperature and oil pressure gauges - check
11 Instrument cluster - removal and installation
12 Radio and speakers - removal and installation
13 Antenna - removal and installation
14 Headlight bulb - replacement
15 Headlights and fog lights - adjustment
16 Headlight housing - replacement
17 Bulb replacement
18 Wiper motor - replacement
19 Horn - check and replacement
20 Daytime Running Lights (DRL) - general information
21 Rear window defogger (SUV models) - check and repair
22 Cruise control system - description and check
23 Power window system - description and check
24 Power door lock and keyless entry system - description and check
25 Electric side view mirrors - description and check
26 Power seats - description and check
27 Data Link Communication system - description
28 Airbag system - general information
29 Wiring diagrams - general information

1 General information

WARNING:

Refer to the Warning and Caution in Chapter 5, Section 1 under "Battery disconnection."

The electrical system is a 12-volt, negative ground type. Power for the lights and all electrical accessories is supplied by a lead/acid-type battery that is charged by the alternator.

This Chapter covers repair and service procedures for the various electrical components not associated with the engine. Information on the battery, alternator, distributor and starter motor can be found in Chapter 5.

It should be noted that when portions of the electrical system are serviced, the negative cable should be disconnected from the battery to prevent electrical shorts and/or fires.

CAUTION:

On models equipped with the Theftlock audio system, be sure the lockout feature is turned off before performing any procedure which requires disconnecting the battery (see the front of this manual).

2 Electrical troubleshooting - general information

Refer to illustrations 2.5a, 2.5b, 2.6, 2.9 and 2.15

A typical electrical circuit consists of an electrical component, any switches, relays, motors, fuses, fusible links or circuit breakers related to that component and the wiring and connectors that link the component to both the battery and the chassis. To help you pinpoint an electrical circuit problem, wiring diagrams are included at the end of this Chapter.

Before tackling any troublesome electrical circuit, first study the appropriate wiring diagrams to get a complete understanding of what makes up that individual circuit. Trouble spots, for instance, can often be narrowed down by noting if other components related to the circuit are operating properly. If several components or circuits fail at one time, chances are the problem is in a fuse or ground connection, because several circuits are often routed through the same fuse and ground connections.

Electrical problems usually stem from simple causes, such as loose or corroded connections, a blown fuse, a melted fusible link or a failed relay. Visually inspect the condition of all fuses, wires and connections in a problem circuit before troubleshooting the circuit.

If test equipment and instruments are going to be utilized, use the diagrams to plan ahead of time where you will make the necessary connections in order to accurately pinpoint the trouble spot.

The basic tools needed for electrical troubleshooting include a circuit tester or voltmeter (a 12-volt bulb with a set of test leads can also be used), a continuity tester, which includes a bulb, battery and set of test leads, and a jumper wire, preferably with a circuit breaker incorporated, which can be used to bypass electrical components (see illustrations). Before attempting to locate a problem with test instruments, use the wiring diagram(s) to decide where to make the connections.

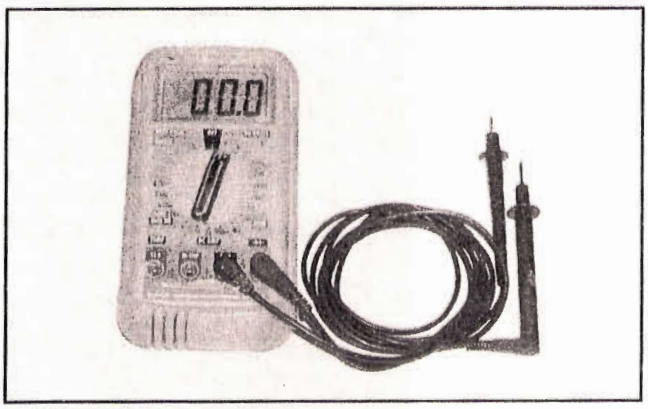

2.5a The most useful tool for electrical troubleshooting is a digital multimeter that can check volts, amps, and test continuity

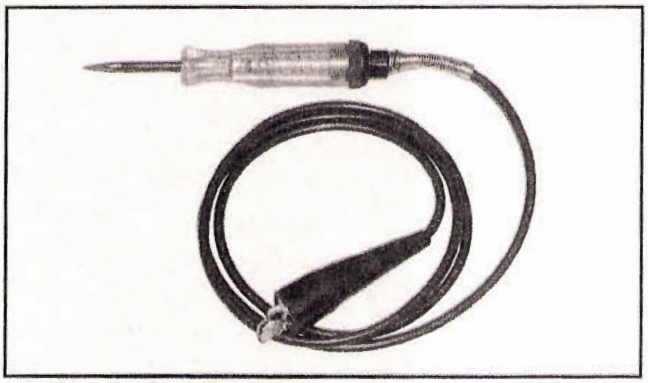

2.5b A test light is a very handy tool for checking voltage

VOLTAGE CHECKS

Voltage checks should be performed if a circuit is not functioning properly. Connect one lead of a circuit tester to either the negative battery terminal or a known good ground. Connect the other lead to a

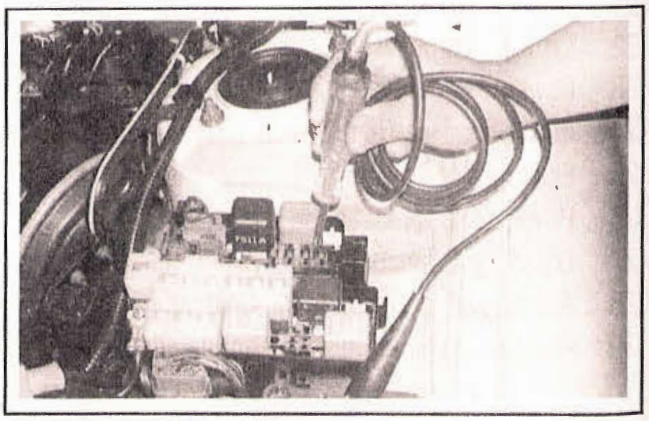

2.6 In use, a basic test light's lead is clipped to a known good ground, then the pointed probe can test connectors, wires or electrical sockets - if the bulb lights, the part being tested has battery voltage

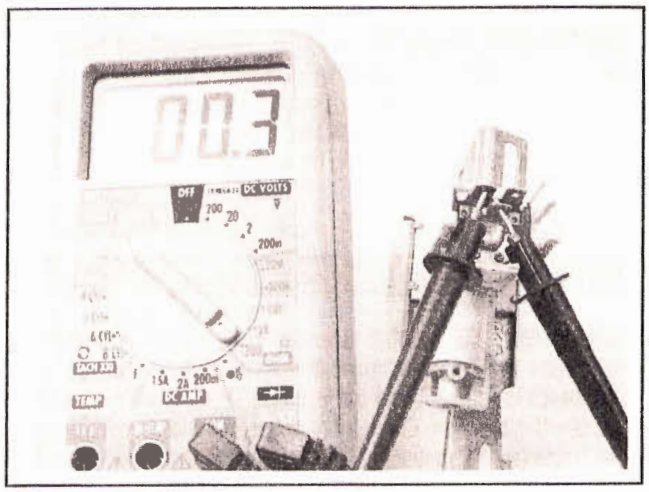

2.9 With a multimeter set to the ohms scale, resistance can be checked across two terminals - when checking for continuity, a low reading indicates continuity, a high reading indicates lack of continuity

connector in the circuit being tested, preferably nearest to the battery or fuse (see illustration). If the bulb of the tester lights, voltage is present, which means that the part of the circuit between the connector and the battery is problem free. Continue checking the rest of the circuit in the same fashion. When you reach a point at which no voltage is present, the problem lies between that point and the last test point with voltage. Most of the time the problem can be traced to a loose connection.

➡Note: Keep in mind that some circuits receive voltage only when the ignition key is in the Accessory or Run position.

FINDING A SHORT

One method of finding shorts in a circuit is to remove the fuse and connect a test light or voltmeter in place of the fuse terminals. There should be no voltage present in the circuit. Move the wiring harness from side-to-side while watching the test light. If the bulb goes on, there is a short to ground somewhere in that area, probably where the insulation has rubbed through. The same test can be performed on each component in the circuit, even a switch.

GROUND CHECK

Perform a ground test to check whether a component is properly grounded. Disconnect the battery and connect one lead of a continuity tester or multimeter (set to the ohms scale), to a known good ground. Connect the other lead to the wire or ground connection being tested. If the resistance is low (less than 5 ohms), the ground is good. If the bulb on a self-powered test light does not go on, the ground is not good.

CONTINUITY CHECK

A continuity check is done to determine if there are any breaks in a circuit - if it is passing electricity properly. With the circuit off (no power in the circuit), a self-powered continuity tester or multimeter can be used to check the circuit. Connect the test leads to both ends of the circuit (or to the "power" end and a good ground), and if the test light comes on the circuit is passing current properly (see illustration). If the

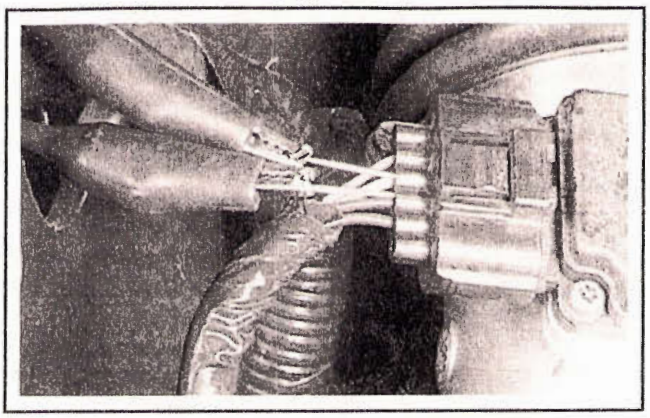

2.15 To backprobe a connector, insert a small, sharp probe (such as a straight-pin) into the back of the connector alongside the desired wire until it contacts the metal terminal inside; connect your meter leads to the probes - this allows you to test a functioning circuit

resistance is low (less than 5 ohms), there is continuity; if the reading is 10,000 ohms or higher, there is a break somewhere in the circuit. The same procedure can be used to test a switch, by connecting the continuity tester to the switch terminals. With the switch turned On, the test light should come on (or low resistance should be indicated on a meter).

FINDING AN OPEN CIRCUIT

When diagnosing for possible open circuits, it is often difficult to locate them by sight because the connectors hide oxidation or terminal misalignment. Merely wiggling a connector on a sensor or in the wiring harness may correct the open circuit condition. Remember this when an open circuit is indicated when troubleshooting a circuit. Intermittent problems may also be caused by oxidized or loose connections.

Electrical troubleshooting is simple if you keep in mind that all electrical circuits are basically electricity running from the battery, through the wires, switches, relays, fuses and fusible links to each electrical component (light bulb, motor, etc.) and to ground, from which it is passed back to the battery. Any electrical problem is an interruption in the flow of electricity to and from the battery.

CONNECTORS

Most electrical connections on these vehicles are made with multiwire plastic connectors. The mating halves of many connectors are secured with locking clips molded into the plastic connector shells. The mating halves of large connectors, such as some of those under the instrument panel, are held together by a bolt through the center of the connector.

To separate a connector with locking clips, use a small screwdriver to pry the clips apart carefully, then separate the connector halves. Pull only on the shell, never pull on the wiring harness as you may damage the individual wires and terminals inside the connectors. Look at the connector closely before trying to separate the halves. Often the locking clips are engaged in a way that is not immediately clear. Additionally, many connectors have more than one set of clips.

Each pair of connector terminals has a male half and a female half. When you look at the end view of a connector in a diagram, be sure to

understand whether the view shows the harness side or the component side of the connector. Connector halves are mirror images of each other, and a terminal shown on the right side end-view of one half will be on the left side end-view of the other half.

It is often necessary to take circuit voltage measurements with a connector connected. Whenever possible, carefully insert a small straight pin (not your meter probe) into the rear of the connector shell to contact the terminal inside, then clip your meter lead to the pin. This kind of connection is called "backprobing" (see illustration). When inserting a test probe into a terminal, be careful not to distort the terminal opening. Doing so can lead to a poor connection and corrosion at that terminal later. Using the small straight pin instead of a meter probe results in less chance of deforming the terminal connector.

3 Fuses and fusible links - general information

FUSES

Refer to illustrations 3.1a, 3.1b, 3.3a and 3.3b

The electrical circuits of the vehicle are protected by a combination of fuses, circuit breakers and fusible links. The interior fuse/relay panel is located at the left end of the instrument panel, while the main fuse-relay panel is in the engine compartment (see illustrations).

Each of the fuses is designed to protect a specific circuit, and the various circuits are identified on the fuse panel itself.

Several sizes of fuses are employed in the fuse blocks. There are small, medium and large sizes of the same design, all with the same blade terminal design. The medium and large fuses can be removed with your fingers, but the small fuses require the use of pliers or the small plastic fuse-puller tool found in most fuse boxes. If an electrical component fails, always check the fuse first. The best way to check the fuses is with a test light. Check for power at the exposed terminal tips of each fuse (see illustration). If power is present at one side of the fuse but not the other, the fuse is blown. A blown fuse can also be identified by visually inspecting it (see illustration).

Be sure to replace blown fuses with the correct type. Fuses (of the same physical size) of different ratings may be physically interchangeable, but only fuses of the proper rating should be used. Replacing a fuse with one of a higher or lower value than specified is not recommended. Each electrical circuit needs a specific amount of protection. The amperage value of each fuse is molded into the top of the fuse body.

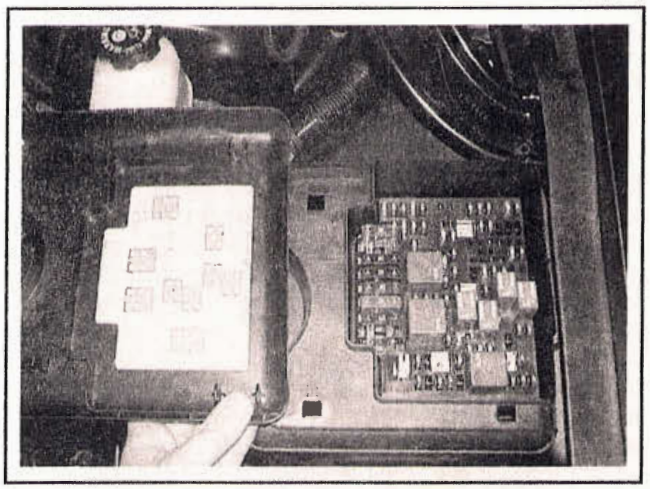

3.1a The main fuse/relay box is in the engine compartment - the inside of the cover has a legend to identify the fuses and relays

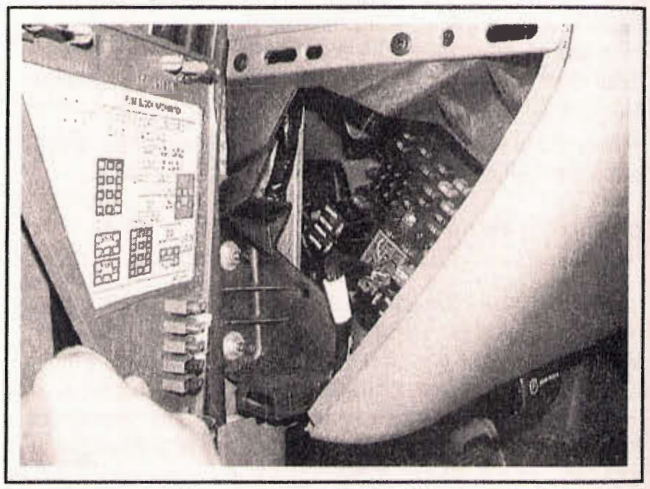

3.1b The interior fuse/relay panel is located at the left end of the instrument panel under a cover - the inside of the instrument panel end cap has the identification legends

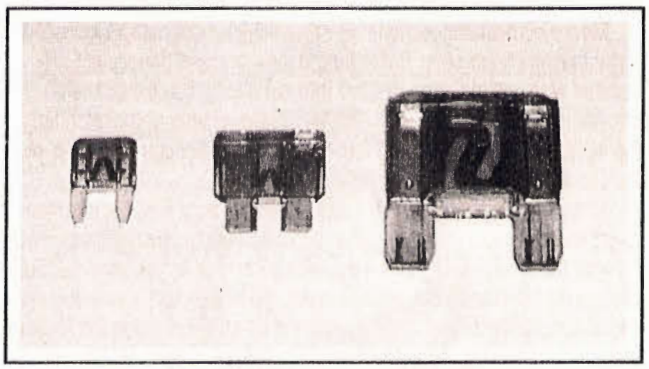

3.3a All three of these fuses are of 30-amp rating, yet are different sizes - make sure you get the right amperage and size when purchasing replacement fuses

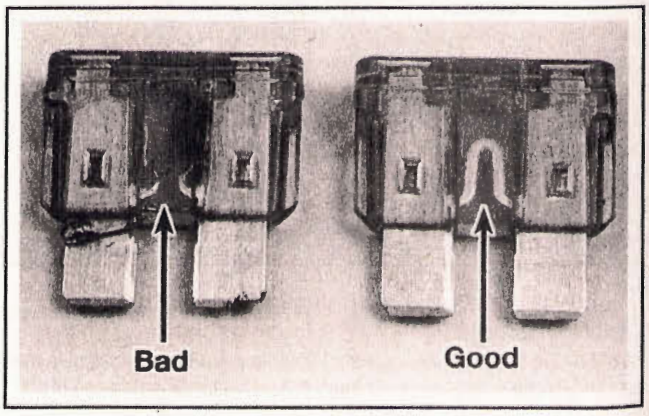

3.3b When a fuse blows, the element between the terminals melts - the fuse on the left is blown, the one on the right is good

If the replacement fuse immediately fails, don't replace it again until the cause of the problem is isolated and corrected. In most cases, this will be a short circuit in the wiring caused by a broken or deteriorated wire.

FUSIBLE LINKS

Refer to illustrations 3.7 and 3.9

Some circuits are protected by fusible links. The links are used in circuits that are not ordinarily fused, such as the alternator circuit.

The fusible link for the alternator circuit is located on the front side of the engine, and is easily identified (see illustration). The link is a short length of heavy wire that is marked "fusible link" on the outer cover.

To replace a fusible link, first disconnect the negative battery cable.

CAUTION:

On models equipped with the Theftlock audio system, be sure the lockout feature is turned off before performing any procedure which requires disconnecting the battery (see the front of this manual).

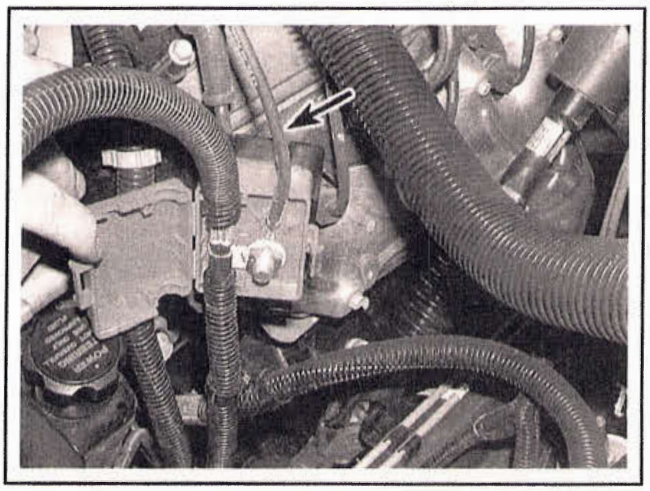

3.7 This cable (arrow) from the alternator to the battery cable jumper terminal is the fusible link

Although the fusible links appear to be a heavier gauge than the wires they're protecting, the appearance is due to the thick insulation. All fusible links are several wire gauges smaller than the wire they're designed to protect. Fusible links can't be repaired, but a new link of the same size wire can be installed. The procedure is as follows:

a) Cut the damaged fusible link out of the wire just behind the connector.
b) Strip the insulation back approximately 1-inch.
c) Spread the strands of the exposed wire apart, push them together and twist them in place (see illustration).
d) Use rosin core solder and solder the wires together to obtain a good connection.
e) Use plenty of electrical tape around the soldered joint. No wires should be exposed.
f) Connect the negative battery cable. Test the circuit for proper operation.

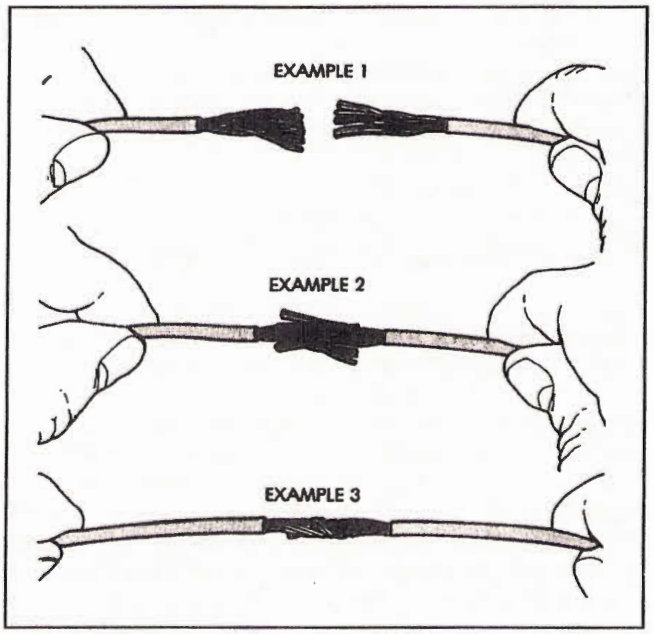

3.9 To repair a fusible link, cut out the damaged section, then join a new section by stripping the wire and twisting it together, as shown here - when securely joined, solder the connections and wrap them with electrical tape

4 Circuit breakers - general information and check

Circuit breakers protect certain circuits, such as the power windows and power seats. Depending on the vehicle's accessories, there may be two 25-amp circuit breakers, located in the interior fuse/relay box at the left end of the dashboard.

Because the circuit breakers reset automatically, an electrical overload in a circuit-breaker-protected system will cause the circuit to fail momentarily, then come back on. If the circuit does not come back on, check it immediately.

For a basic check, pull the circuit breaker up out of its socket on the fuse panel, but just far enough to probe with a voltmeter. The breaker should still contact the sockets.

With the voltmeter negative lead on a good chassis ground, touch each end prong of the circuit breaker with the positive meter probe. There should be battery voltage at each end. If there is battery voltage only at one end, the circuit breaker must be replaced.

5 Relays - general information and testing

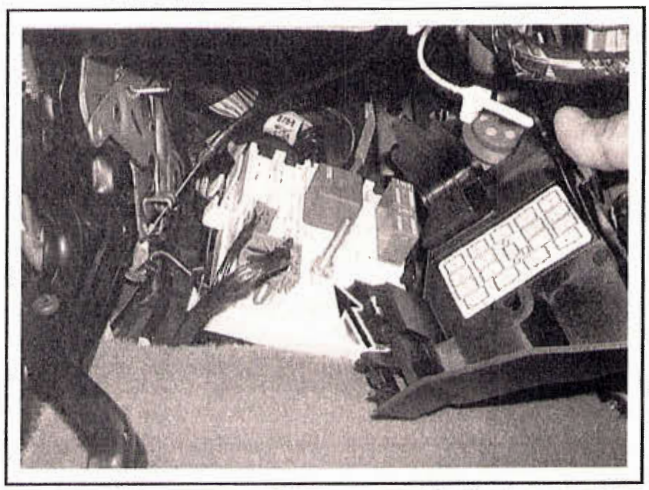

5.1 Several additional relays are located here (arrow) under the left end of the instrument panel, with a cover retained by a twist-off plastic nut

GENERAL INFORMATION

Refer to illustration 5.1

1 Several electrical accessories in the vehicle, such as the fuel injection system, horns, starter, and fog lamps use relays to transmit the electrical signal to the component. Relays use a low-current circuit (the control circuit) to open and close a high-current circuit (the power circuit). If the relay is defective, that component will not operate properly. Most relays are mounted in the engine compartment and interior fuse/relay boxes (see illustrations 3.1a and 3.1b). The electrical center located below the left end of the instrument panel, also contains several relays (see illustration). If a faulty relay is suspected, it can be removed and tested using the procedure below or by a dealer service department or a repair shop. Defective relays must be replaced as a unit.

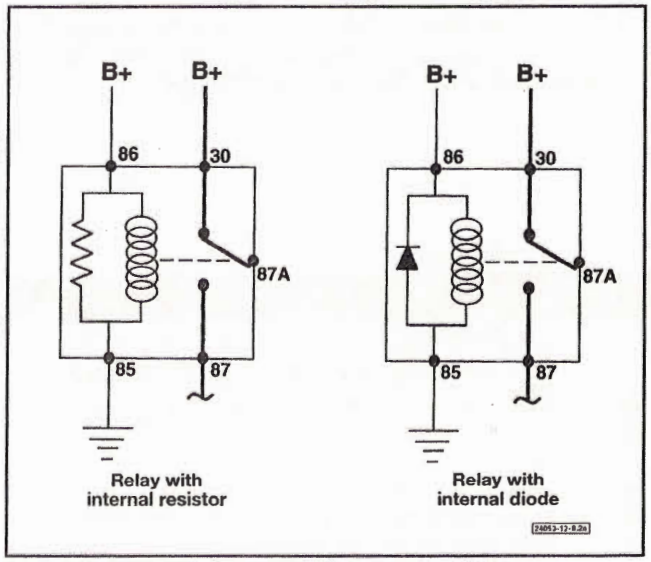

5.2a Typical ISO relay designs, terminal numbering and circuit connections

TESTING

Refer to illustrations 5.2a and 5.2b

2 Most of the relays used in these vehicles are of a type often called "ISO" relays, which refers to the International Standards Organization. The terminals of ISO relays are numbered to indicate their usual circuit connections and functions. There are two basic layouts of terminals on the relays used in the covered vehicles (see illustrations).

3 Refer to the wiring diagram for the circuit to determine the proper connections for the relay you're testing. If you can't determine the correct connection from the wiring diagrams, however, you may be able to determine the test connections from the information that follows.

4 Two of the terminals are the relay control circuit and connect to the relay coil. The other relay terminals are the power circuit. When the relay is energized, the coil creates a magnetic field that closes the larger contacts of the power circuit to provide power to the circuit loads.

5 Terminals 85 and 86 are normally the control circuit. If the relay contains a diode, terminal 86 must be connected to battery positive (B+) voltage and terminal 85 to ground. If the relay contains a resistor, terminals 85 and 86 can be connected in either direction with respect to B+ and ground.

6 Terminal 30 is normally connected to the battery voltage (B+) source for the circuit loads. Terminal 87 is connected to the ground side of the circuit, either directly or through a load. If the relay has several alternate terminals for load or ground connections, they usually are numbered 87A, 87B, 87C, and so on.

7 Use an ohmmeter to check continuity through the relay control coil.

a) Connect the meter according to the polarity shown in the illustration for one check; then reverse the ohmmeter leads and check continuity in the other direction.

b) If the relay contains a resistor, resistance should be indicated on the meter,and should be the same value with the ohmmeter in either direction.

c) If the relay contains a diode, resistance should be higher with the ohmmeter in the forward polarity direction than with the meter leads reversed.

d) If the ohmmeter shows infinite resistance in both directions, replace the relay.

8 Remove the relay from the vehicle and use the ohmmeter to

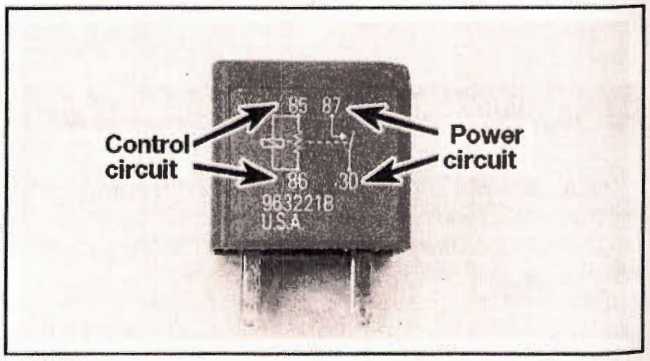

5.2b Most relays are marked on the outside to easily identify the control circuit and power circuit - this one is of the four-terminal type

check for continuity between the relay power circuit terminals. There should be no continuity between terminal 30 and 87 with the relay de-energized.

9 Connect a fused jumper wire to terminal 86 and the positive battery terminal. Connect another jumper wire between terminal 85 and ground. When the connections are made, the relay should click.

10 With the jumper wires connected, check for continuity between the power circuit terminals. Now, there should be continuity between terminals 30 and 87.

11 If the relay fails any of the above tests, replace it.

6 Turn signal and hazard flashers - check and replacement

Refer to illustration 6.5

1 The "combination" flasher, located on the back of the interior fuse/relay box, flashes the turn signals when the turn signal switch is operated, and all four signals when the emergency flasher switch on top of the steering column is On.

2 When the flasher unit is functioning properly, an audible click can be heard during its operation. If the turn signal indicator on one side of the vehicle flashes much more rapidly than normal, a faulty turn signal bulb is indicated.

3 If both turn signals fail to blink, the problem may be due to a blown fuse, a faulty flasher unit, a broken switch or a loose or open connection. If a quick check of the fuse box indicates that the turn signal fuse has blown, check the wiring for a short before installing a new fuse.

4 The type of combination flasher unit used on the covered models has complex internal circuitry, and can't be tested using standard electrical test equipment. Refer to the wiring diagrams at the end of this Chapter and test the circuitry before replacing the flasher with a known-good unit.

5 To remove the flasher, reach up under the left end of the instrument panel and pull it out of the fuse block (see illustration).

➡Note: It will be easier to access if the driver's knee bolster is removed first (see Chapter 11).

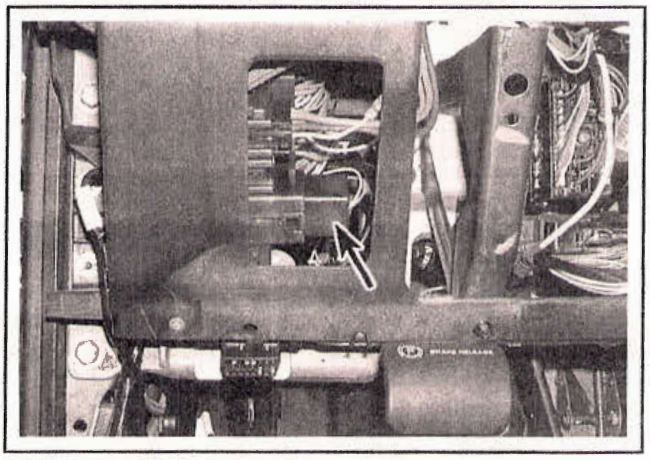

6.5 The turn signal/hazard flasher (arrow) is located on the backside of the left instrument panel fuse/relay box (shown with driver's knee bolster removed for clarity)

6 Make sure that the replacement unit is identical to the original. Compare the old one to the new one before installing it.

7 Installation is the reverse of removal.

8 If the flasher unit is not the problem, refer to Section 7 and test the turn signal/hazard portion of the multi-function switch.

7 Steering column switches - replacement

Refer to illustrations 7.3 and 7.4

WARNING:

The models covered by this manual are equipped with Supplemental Restraint Systems (SRS), more commonly known as airbags. Always disable the airbag system before working in the vicinity of any airbag system components to avoid the possibility of accidental deployment of the airbags, which could cause personal injury (see Section 28).

1 The multi-function switch is located on the left side of the steering column. It incorporates into one switch the turn signal, headlight dimmer, windshield wiper/washer and, if equipped, cruise control functions.

2 Remove the steering column covers and driver's knee bolster (see Chapter 11).

3 Remove the Torx-head multi-function switch screws, then detach the switch from the steering column (see illustration).

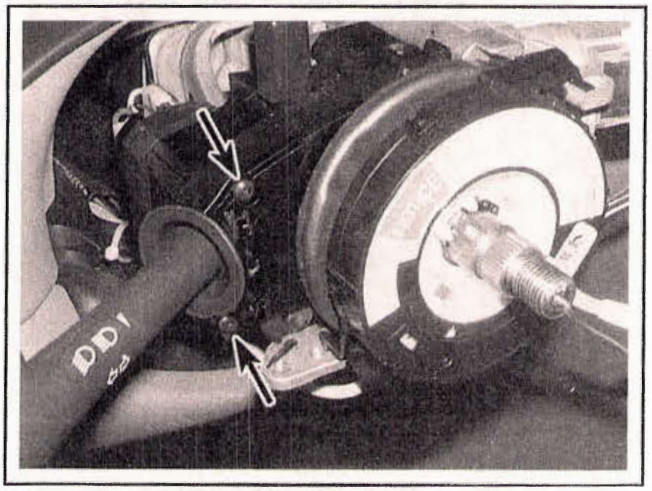

7.3 Remove the screws (arrows) with a Torx bit

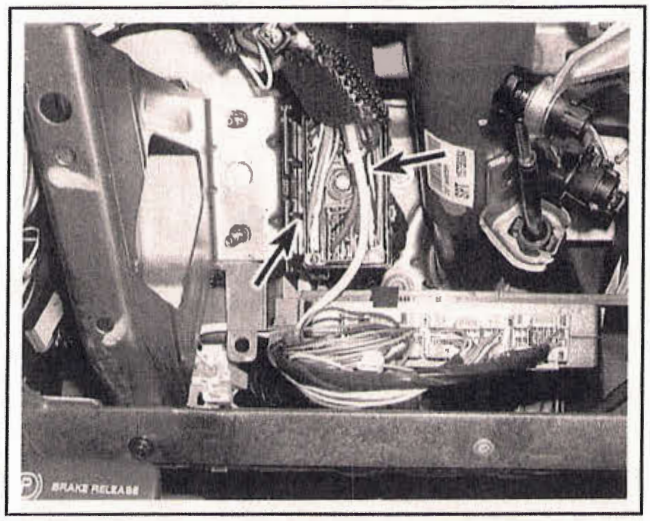

7.4 The two multi-function switch harness connectors (arrows) are plugged into this larger connector next to the steering column

4 Trace the multi-function switch wires down to the large connector, and unplug the connectors from the larger connector (see illustration).

5 Unplug the two, two-wire connectors from the multi-function switch and snip the wire ties that bundle the multi-function switch harness to the other harnesses at the large connector. Remove the harness with the multi-function switch.

6 Installation is the reverse of removal.

8 Ignition switch and key lock cylinder - replacement

Refer to illustrations 8.4a, 8.4b, 8.4c and 8.5

WARNING:

The models covered by this manual are equipped with Supplemental Restraint Systems (SRS), more commonly known as airbags. Always disable the airbag system before working in the vicinity of any airbag system components to avoid the possibility of accidental deployment of the airbags, which could cause personal injury (see Section 28).

1 The ignition switch, located on the right side of the steering column, is comprised of a cast-metal housing, an ignition lock cylinder and an electrical component, the switch device.

2 Disconnect the negative battery cable.

CAUTION:

On models equipped with the Theftlock audio system, be sure the lockout feature is turned off before performing any procedure which requires disconnecting the battery (see the front of this manual).

3 Remove the steering column covers and driver's knee bolster (see Chapter 11). On models with automatic transmissions, the shift linkage must be in Park before removing/installing the ignition switch.

4 The ignition switch must be replaced with its electrical harness and end connectors where the harness joins with the vehicle electrical system. Disconnect the electrical connectors at the switch and the ignition switch harness ends, then remove the switch (see illustrations). Refer to Section 7 and remove the two multi-function switch connec-

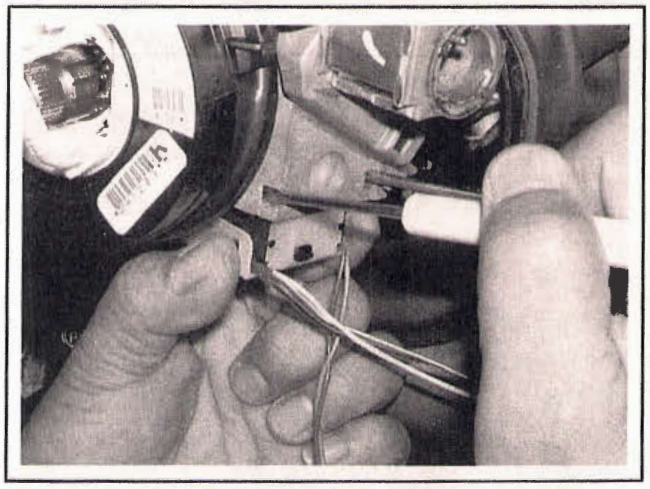

8.4a Remove the electrical portion of the ignition switch (arrow) by prying down with two screwdrivers

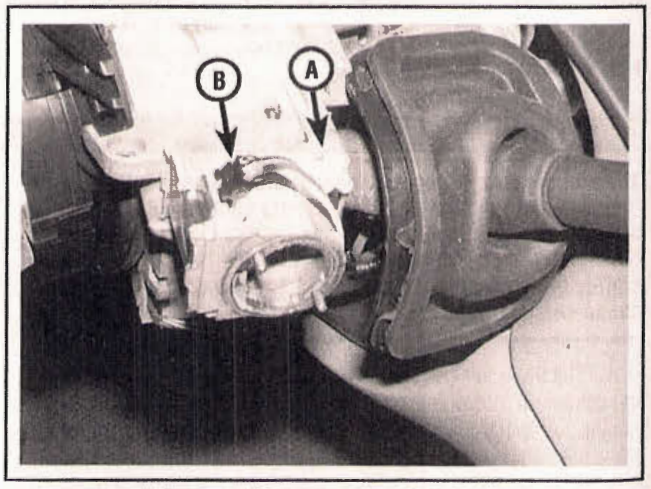

8.4b With the switch pulled away from the column, disconnect these two connectors - twist connector A clockwise and pull out, then pull up on connector B (key cylinder must be removed first as shown)

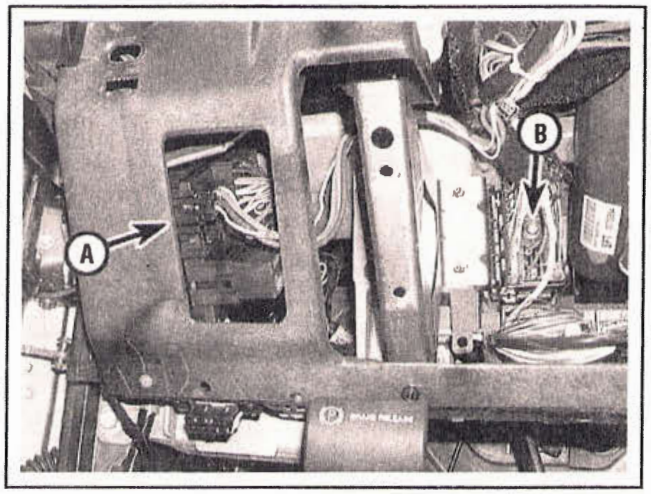

8.4c Remove this connector (A) from the back of the left-hand fuse/relay panel, and remove the main steering column connector (B) with the ignition switch harness (multi-function switch connectors removed from main connector)

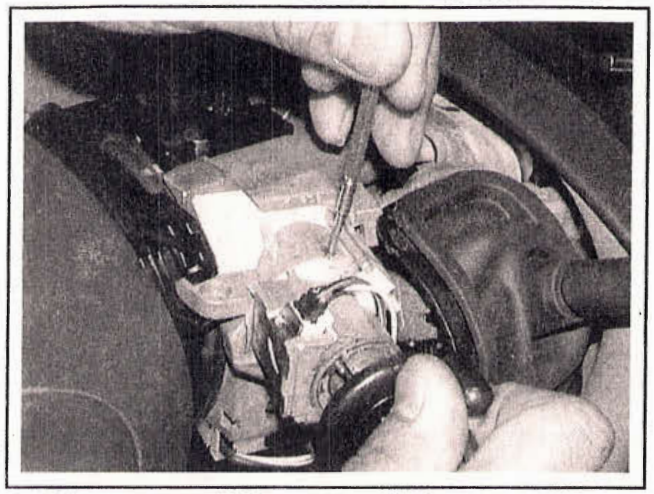

8.5 Push the retaining pin (arrow) in to unseat the lock cylinder, then withdraw the key and cylinder

tors from the larger steering column connector.

➡Note: The key lock cylinder must be removed first, see below.

5 To remove the key lock cylinder, place the key in the lock and rotate clockwise to the Start (1999 through 2002) or Run (2003 and later) position. Push in the retainer pin and pull the key and lock cylinder from the ignition switch (see illustration).

6 When installing the cylinder, align the retainer with the retainer slot in the housing, then push the cylinder in until it snaps in position.

7 The remainder of installation is the reverse of removal.

9 Instrument panel switches - replacement

✻✻ WARNING:

The models covered by this manual are equipped with Supplemental Restraint Systems (SRS), more commonly known as airbags. Always disable the airbag system before working in the vicinity of any airbag system components to avoid the possibility of accidental deployment of the airbags, which could cause personal injury (see Section 28).

HEADLIGHT SWITCH

♦ Refer to illustration 9.3

1 Disconnect the negative cable at the battery (see Chapter 1).

✻✻ CAUTION:

On models equipped with the Theftlock audio system, be sure the lockout feature is turned off before performing any procedure which requires disconnecting the battery (see the front of this manual).

2 Remove the instrument cluster bezel (see Chapter 11).

3 Use a small screwdriver to pry the two plastic clips, then pull the headlight/panel dimmer switch out of the left electrical pod (see illustration).

4 Disconnect the electrical connector on the back of the switch.

5 Installation is the reverse of removal.

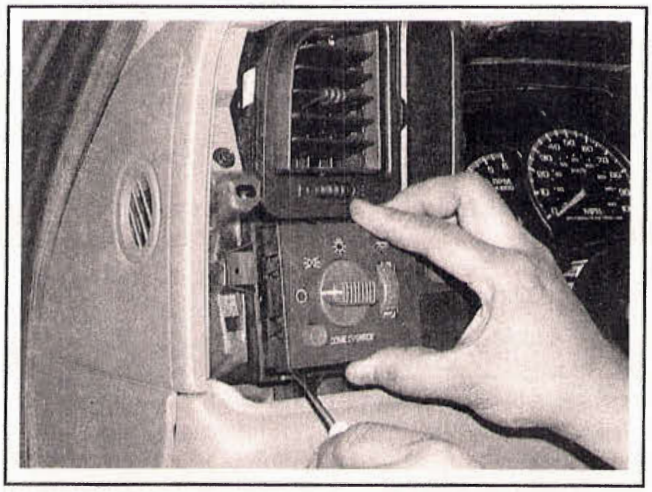

9.3 Pry the clips with a small screwdriver to remove the headlight switch

ON/OFF SWITCHES

Refer to illustration 9.7

6 Depending on the options of the vehicle, there may be one or more switches on the instrument panel, including fog lights, overhead beacon, cargo lamp or selectable ride control. In addition, all models have a passenger airbag On/Off switch that allows you to disengage the passenger airbag if a child is riding in the right-front passenger seat.

7 All of the above-mentioned switches are accessible when the instrument cluster bezel is removed (see Chapter 11), and are removed by prying clips with a small screwdriver and pulling the switch out (see illustration).

CAUTION:

Before removing the airbag On/Off switch, disable the airbag system (see Section 28).

8 With simple on/off switches, use an ohmmeter or self-powered continuity tester, check the switch for proper continuity between the terminals. There should be continuity between terminals only when the switch is engaged. If the switch fails the test, replace the switch.

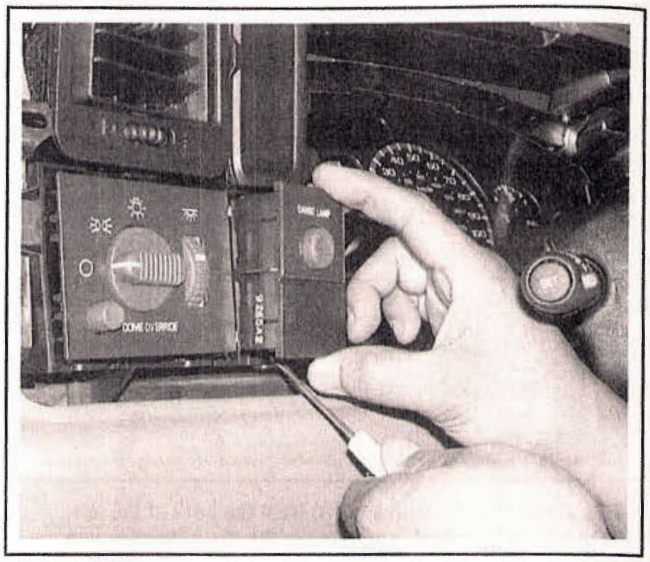

9.7 Remove on/off type switches (cargo lamp switch shown) by depressing the clips (arrows) and pulling the switch out of the instrument panel

10 Fuel, temperature and oil pressure gauges - check

WARNING:

The models covered by this manual are equipped with Supplemental Restraint Systems (SRS), more commonly known as airbags. Always disable the airbag system before working in the vicinity of any airbag system components to avoid the possibility of accidental deployment of the airbags, which could cause personal injury (see Section 28).

Note: This procedure applies to conventional analog type gauges (NON-digital) only.

1 All tests below require the ignition switch to be turned to the Off position before testing.

2 If the gauge pointer does not move from the empty or cold positions, check the fuse. If the fuse is OK, locate the particular sending unit for the circuit you're working on (see Chapter 4 for fuel sending unit location, Chapter 3 for the temperature gauge sending unit location, Chapter 2 for the oil pressure sending unit location). Connect the sending unit connector to ground with a jumper wire.

3 Turn the ignition key to On momentarily. If the pointer goes to the full or hot position replace the sending unit.

Note: Turn the key Off right away, because grounding the sending unit for too long could damage the gauge.

If the pointer stays in same position, use a jumper wire to ground the sending unit terminal on the back of the gauge. If necessary, refer to the wiring diagrams at the end of this Chapter. If the pointer moves, the problem lies in the wiring between the gauge and the sending unit. If the pointer does not move with the sending unit terminal on the back of the gauge grounded, check for voltage at the other terminal of the gauge. There should not be voltage.

11 Instrument cluster - removal and installation

Refer to illustrations 11.4 and 11.5

WARNING:

The models covered by this manual are equipped with Supplemental Restraint Systems (SRS), more commonly known as airbags. Always disable the airbag system before working in the vicinity of any airbag system components to avoid the possibility of accidental deployment of the airbags, which could cause personal injury (see Section 28).

1 Disconnect the negative cable from the battery (see Chapter 1).

CAUTION:

On models equipped with the Theftlock audio system, be sure the lockout feature is turned off before performing any procedure which requires disconnecting the battery (see the front of this manual).

2 Remove the instrument cluster bezel (see Chapter 11).

3 On models with tilt steering columns, lower the column as far as

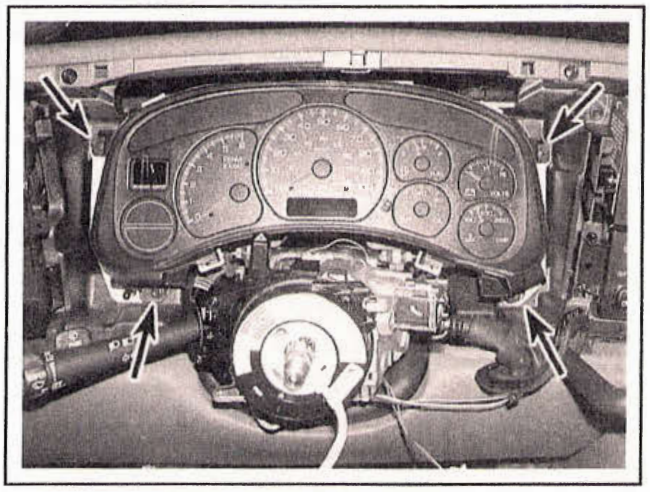

11.4 Remove the instrument cluster mounting screws (arrows)

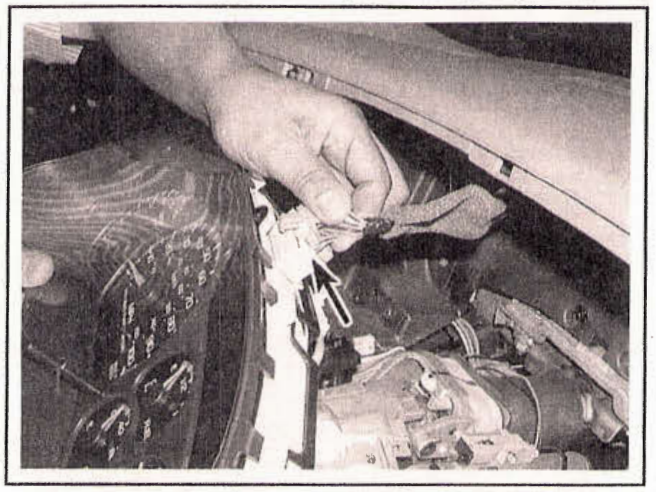

11.5 Pull the cluster out enough to disconnect the electrical connector (arrow)

it will go, and on models with column shift, apply the parking brake and lower the shift lever as far as possible.

4 Remove the screws securing the cluster to the instrument panel (see illustration).

5 Pull the cluster forward enough to disengage the single, large electrical connector at the back, then pull the cluster out, tilting the bottom out first (see illustration).

6 Installation is the reverse of removal.

12 Radio and speakers - removal and installation

WARNING:

The models covered by this manual are equipped with Supplemental Restraint Systems (SRS), more commonly known as airbags. Always disable the airbag system before working in the vicinity of any airbag system components to avoid the possibility of accidental deployment of the airbags, which could cause personal injury (see Section 28).

RADIO

Refer to illustrations 12.3a and 12.3b

1 Refer to Chapter 1 and disconnect the negative battery cable, then remove the instrument cluster bezel (see Chapter 11).

CAUTION:

On models equipped with the Theftlock audio system, be sure the lockout feature is turned off before performing any procedure which requires disconnecting the battery (see the front of this manual).

2 Refer to Chapter 11 and remove the instrument cluster bezel.

3 Squeeze the mounting clips, pull the radio out of the instrument panel, disconnect the connectors, then remove it from the vehicle (see illustrations).

4 Installation is the reverse of removal.

12.3a Depress the clips (arrows) and pull the radio out

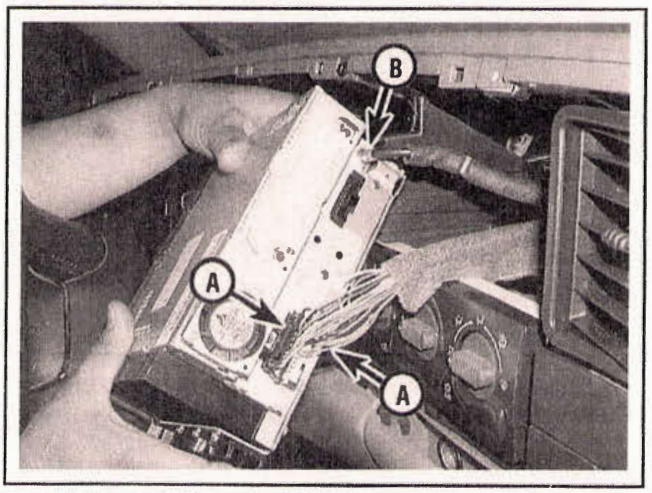

12.3b Disconnect the two connectors (A) from the back of the radio, then disconnect the ground wire and the antenna cable (B)

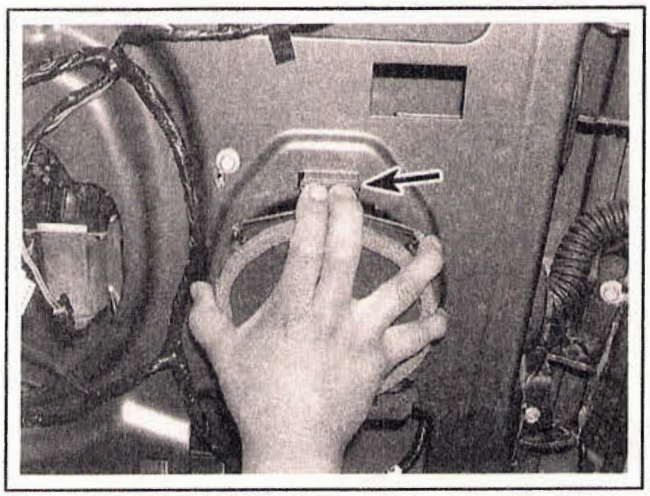

12.6a Push down on the door speaker mounting tab (arrow), then tilt the top out and pull up to clear the lower tabs

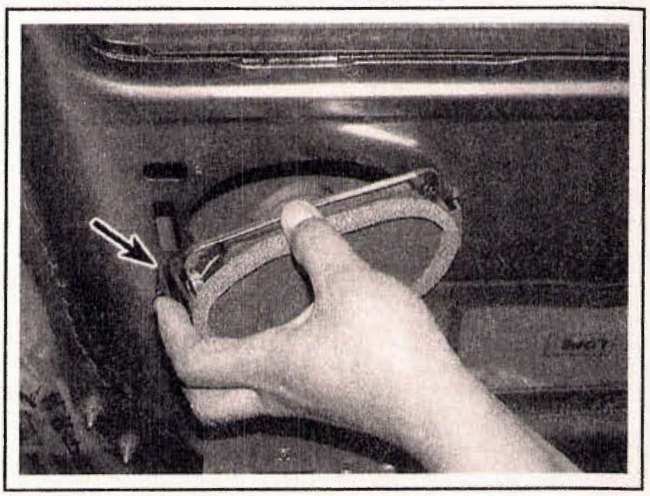

12.6b On rear speakers in pick-ups, depress the clip (arrow) at the rear of the speaker

SPEAKERS

♦ Refer to illustrations 12.6a and 12.6b

5 Remove the door trim panel (see Chapter 11).

➡Note: SUV models have as many as nine door speakers, with a separate subwoofer in the rear. Standard pick-up models have one speaker in each door and one rear speaker on each side mounted in the rear corner trim panel. All are mounted in a similar fashion. Pick-ups with higher-level sound systems have more speakers.

6 Push down on the plastic tab at the top of the speaker and lean the top of the speaker out, then lift the speaker up off the lower tabs (see illustrations). Pull the speaker out of the door, disconnect the electrical connector and remove the speaker from the vehicle.

➡Note: On some speaker installations, the speaker mounting tabs are at the left and right sides, rather than top and bottom.

REAR SEAT AUDIO CONTROLS (SUV MODELS)

♦ Refer to illustrations 12.9 and 12.10

7 Audio controls for the middle seat passengers in SUV models are located at the rear of the center console.

8 To access these controls, remove the upper cover of the console (see Chapter 11).

9 Pull up the clips at the top of the console rear panel, and tilt it back to access the radio controls (see illustration).

10 Disconnect the electrical connectors, then squeeze the clips in and push the radio controls out of the console (see illustration).

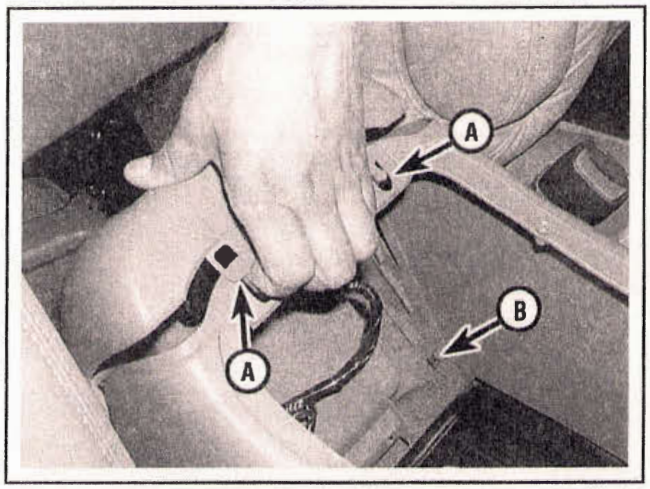

12.9 Pull up the clips (A) and tilt the console rear panel back, pivoting on the metal clips (B) at the bottom

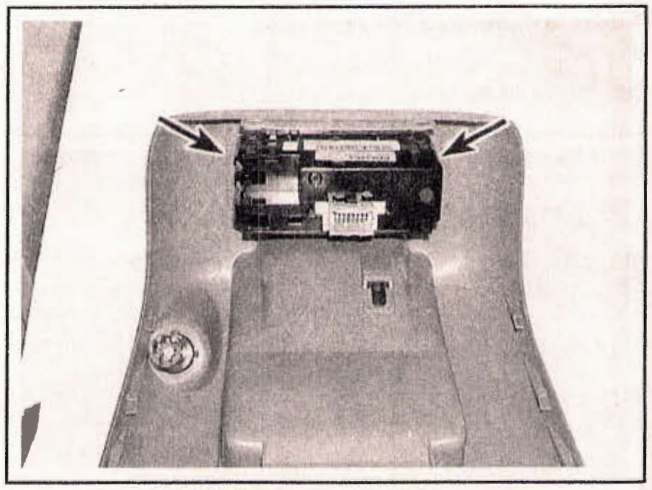

12.10 Disconnect the electrical connectors, then squeeze in the clips (arrows) and push the radio controls out of the panel

13 Antenna - removal and installation

Refer to illustrations 13.1 and 13.4

1 Use a small open-end wrench to unscrew the antenna mast (see illustration). Be very careful - the tool could slip and scratch the body. It's a good idea to surround the base of the antenna with masking tape to prevent scratching.

2 If the cable itself must be replaced, refer to Chapter 11 and remove the instrument panel upper trim pad.

3 With the trim pad removed, disconnect the antenna mast cable from the radio cable where they join in a connector at the far right end of the instrument panel. If the entire cable must be replaced, Refer to Section 12 and remove the radio, then release the cable from the clips along the top edge of the instrument panel.

4 Attach a "fish" wire to the end of the cable, then remove the antenna mast base mounting screws and pull up the base and its cable (see illustration).

5 Attach the new cable to the fish wire and pull the wire back slowly and carefully into the body, routing it over the instrument panel as the original cable had been.

6 Installation of the antenna base and mast is the reverse of the removal procedure.

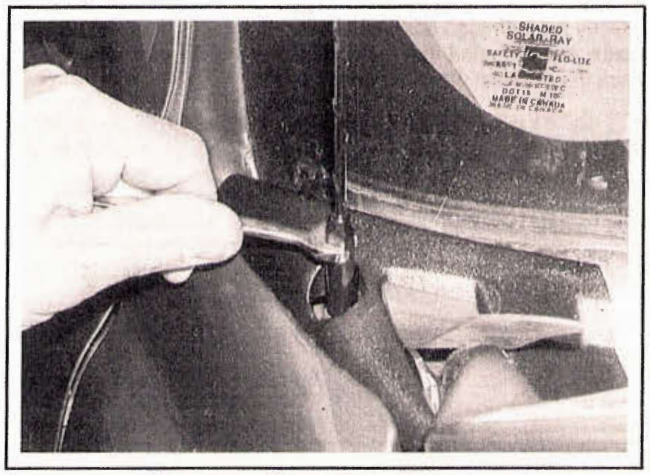

13.1 Use a small wrench to remove the antenna mast

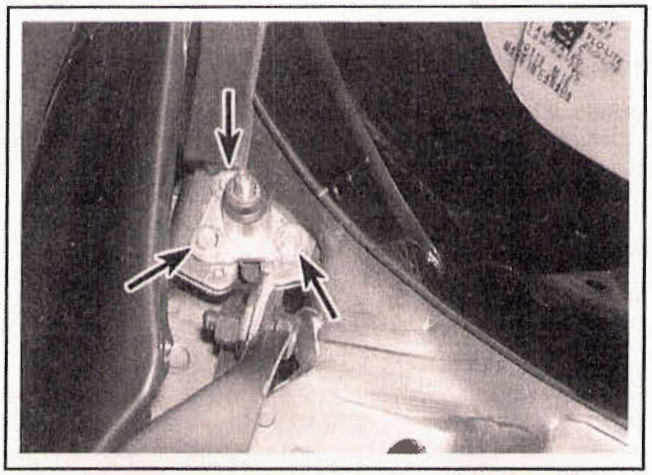

13.4 To remove the antenna base and cable, remove the base mounting screws (arrows) in the right cowl/fender area

14 Headlight bulb - replacement

Refer to illustration 14.2

WARNING:

Halogen bulbs are gas-filled and under pressure and may shatter if the surface is scratched or the bulb is dropped. Wear eye protection and handle the bulbs carefully, grasping only the base whenever possible. Don't touch the surface of the bulb with your fingers because the oil from your skin could cause it to overheat and fail prematurely. If you do touch the bulb surface, clean it with rubbing alcohol.

1 Refer to Section 16 and remove the headlight housing.

2 Turn the headlight bulb holder counterclockwise and withdraw the bulb holder (see illustration).

3 Remove the old bulb from the bulb-holder. Handling the new bulb only with gloves or a clean rag, insert the new bulb in the holder.

4 Installation is the reverse of the removal procedure.

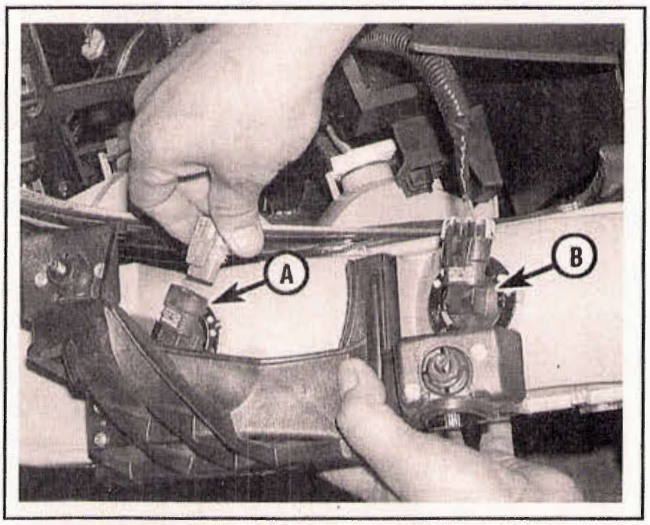

14.2 Disconnect the electrical connector from the headlight housing and pull the bulb holder out, then replace the bulb - A is the low-beam bulb, B is the high-beam bulb

15 Headlights and fog lights - adjustment

WARNING:

The headlights must be aimed correctly. If adjusted incorrectly, they could temporarily blind the driver of an oncoming vehicle and cause an accident or seriously reduce your ability to see the road. The headlights should be checked for proper aim every 12 months and any time a new headlight is installed or front-end bodywork is performed. The following procedure is only an interim step to provide temporary adjustment until the headlights can be adjusted by a properly equipped shop.

HEADLIGHTS

Refer to illustrations 15.1 and 15.2

Note: It is important that the headlights are aimed correctly. If adjusted incorrectly they could blind the driver of an oncoming vehicle and cause a serious accident or seriously reduce your ability to see the road. The headlights should be checked for proper aim every 12 months and any time a new headlight is installed or front end body work is performed. It should be emphasized that the following procedure is only an interim step that will provide temporary adjustment until the headlights can be adjusted by a properly equipped shop.

1 Some models are equipped with composite headlights with two adjustment screws, one controlling left-and-right movement and one for up-and-down movement (see illustration). Later models have only one adjustment screw, controlling up-and-down movement.

2 There are several methods of adjusting the headlights. The simplest method requires a blank wall 25 feet in front of the vehicle and a level floor (see illustration).

3 Position masking tape vertically on the wall in reference to the vehicle centerline and the centerlines of both headlights.

4 Position a horizontal tape line in reference to the centerline of all the headlights.

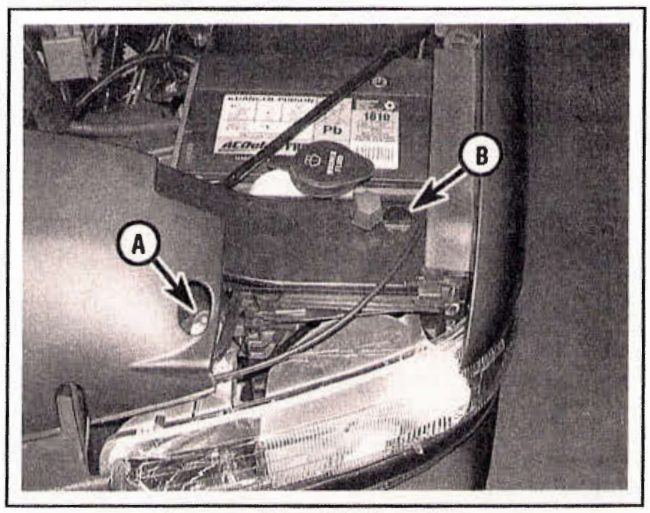

15.1 Open the hood and adjust the headlight alignment with the screws (arrows indicate the access holes) - use a T15 Torx screwdriver

A = Side-to-side adjustment *B = Up-and-down adjustment*

Note: It may be easier to position the tape on the wall with the vehicle parked only a few inches away.

5 Adjustment should be made with the vehicle sitting level, the gas tank half-full and no unusually heavy load in the vehicle.

6 Starting with the low beam adjustment, position the high intensity zone so it is two inches below the horizontal line and two inches to the side of the vertical headlight line, away from oncoming traffic. Twist the adjustment screws until the desired level has been achieved.

7 With the high beams on, the high intensity zone should be vertically centered with the exact center just below the horizontal line.

Note: It may not be possible to position the headlight aim exactly for both high and low beams. If a compromise must be made, keep in mind that the low beams are the most used and have the greatest effect on driver safety.

8 Have the headlights adjusted by a dealer service department at the earliest opportunity.

FOG LIGHTS

Refer to illustration 15.11

9 Some models have optional fog lights that can be aimed just like headlights.

10 Position tape on a wall 25 feet in front of the vehicle (see illustra-

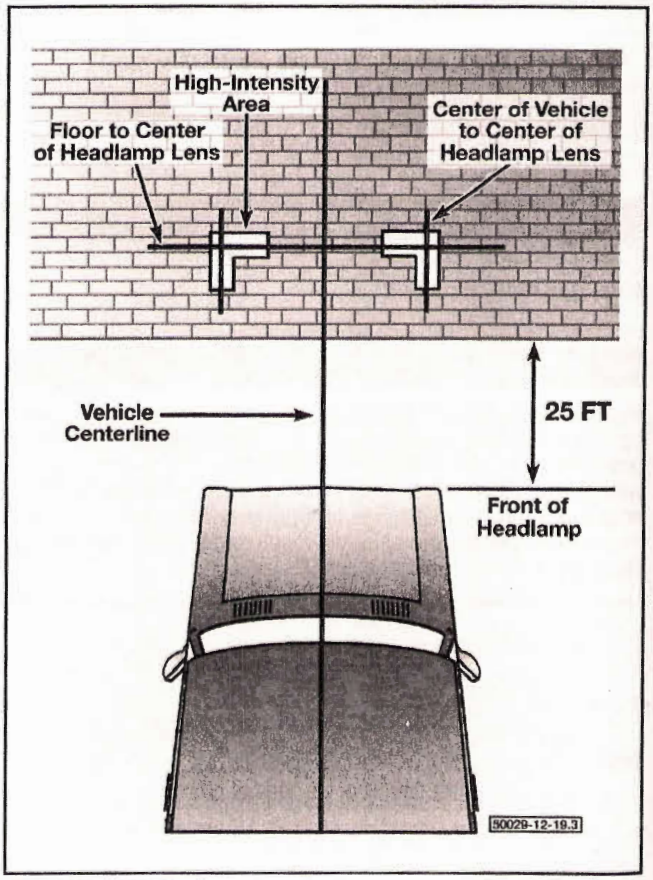

15.2 Headlight adjustment details

tion 15.2). Tape a horizontal line on the wall that represents the height of the fog lamps, and another tape line four inches below that line.

11 Using the adjusting screws on the fog lamps, adjust the pattern on the wall so that the top of the fog lamp beam meets the lower line on the wall, and that the beam is centered horizontally in front of the fog lamps (see illustration).

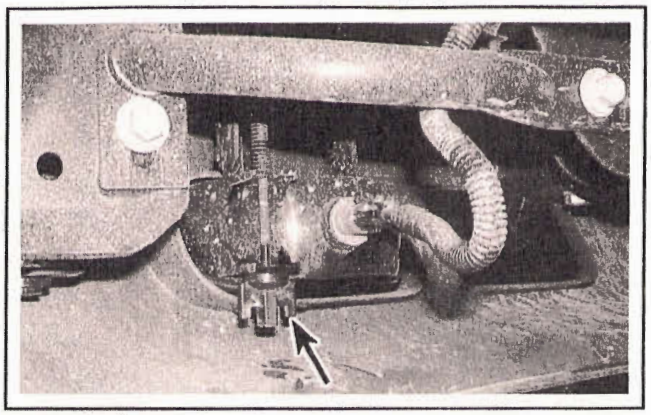

15.11 Twist the thumbscrew (arrow) to adjust the aim of optional fog lights (seen here from behind the bumper)

16 Headlight housing - replacement

Refer to illustration 16.1

1 Open the hood, swing the headlight housing retaining rod(s) forward and pull them up (see illustration).

Note: Some models have two rods, others have only one.

2 Pull the housing forward, out of the body.
3 Disconnect the electrical connectors.
4 Installation is the reverse of removal.

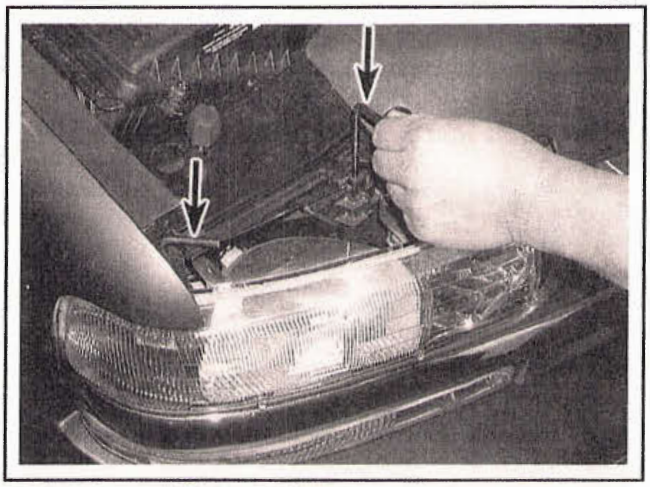

16.1 Twist the headlight housing mounting rod(s) (arrows) out of their clips and pull them straight up to disengage the housings from the vehicle

17 Bulb replacement

WARNING:

Bulbs can remain hot for up to twenty minutes after they're turned off. Be sure bulbs are off and cool before you touch them.

TURN SIGNAL/SIDE-MARKER/DAYTIME RUNNING LIGHTS

Refer to illustrations 17.2, 17.4a and 17.4b

1 Refer to Section 16 and remove the headlight housing.
2 Push in on the spring clip securing one end of the turn-signal housing, then swing the housing out away from the vehicle (see illustration).
3 Disconnect the electrical connectors.

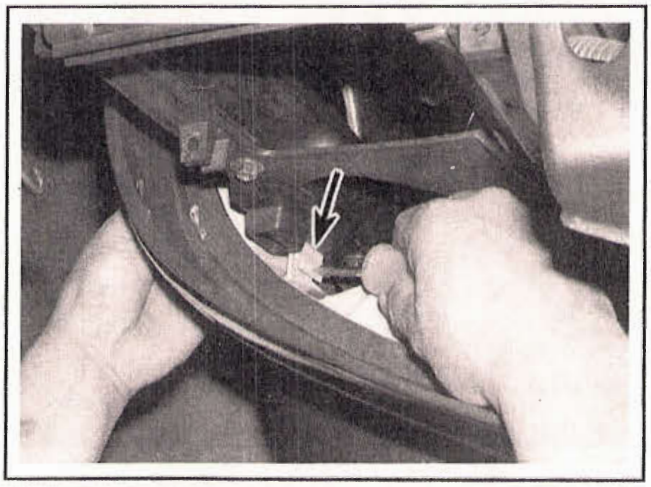

17.2 Push in on the plastic clip (arrow) and swing the turn signal housing out away from the vehicle

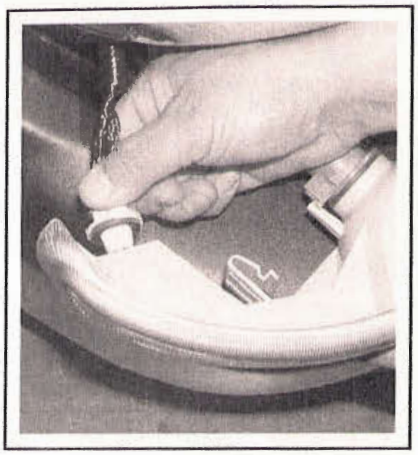

17.4a Pull out the bulb holder for the sidemarker lamp and replace the bulb

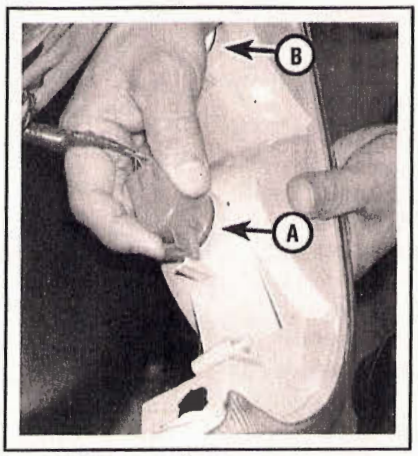

17.4b Twist out the bulb holder for the turn signal light (A). The Daytime Running Light bulb (B) is replaced in the same manner

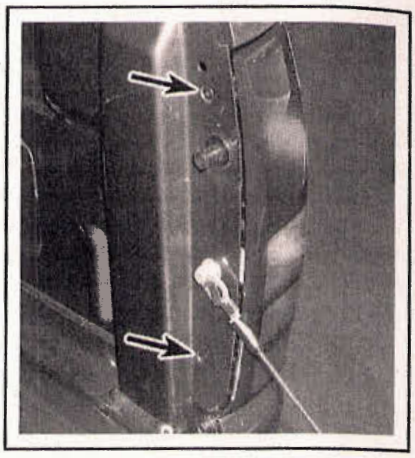

17.6 Remove the taillight housing screws (arrows, pick-up model shown)

4 Each bulb is replaced in the same manner, by twisting the bulb holder out (see illustrations). The bulbs pull straight out of their holder.

5 Installation is the reverse of removal.

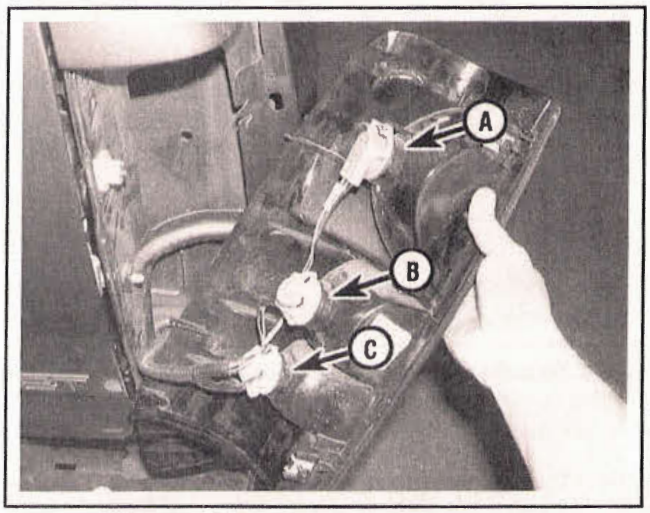

17.7 Rotate the bulb holder and pull it out to remove it - A is the brake light, B is the turn signal, and C is the back-up light

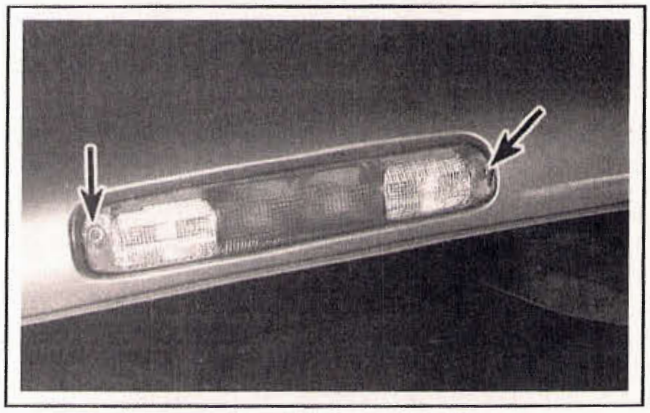

17.9a Remove the screws and pull the CHMSL/cargo light housing out (pick-up models)

TAIL/STOP/TURN/BACK-UP LIGHT

Refer to illustrations 17.6 and 17.7

6 On all models, these rear lights are all in one housing. On pick-up models, lower the tailgate and remove the screws (see illustration). Rotate the housing out to disengage the hooks from in the body. On SUV models, open the liftgate or optional rear doors and remove the screws, then rotate the housing so the hooks will clear the holes in the body.

7 On all models, rotate the bulb holders 1/4-turn counterclockwise and pull them from the housing. Replace the bulb, by pulling it straight out of the holder and pushing the new one in, then insert the holder into the housing and rotate 1/4-turn clockwise to lock (see illustration).

8 Installation is the reverse of removal.

CENTER HIGH-MOUNTED STOP LIGHT (CHMSL)/ CARGO LAMP

Refer to illustrations 17.9a, 17.9b and 17.12

Pick-up models

9 Standing in the truck bed, remove the two Phillips-head screws

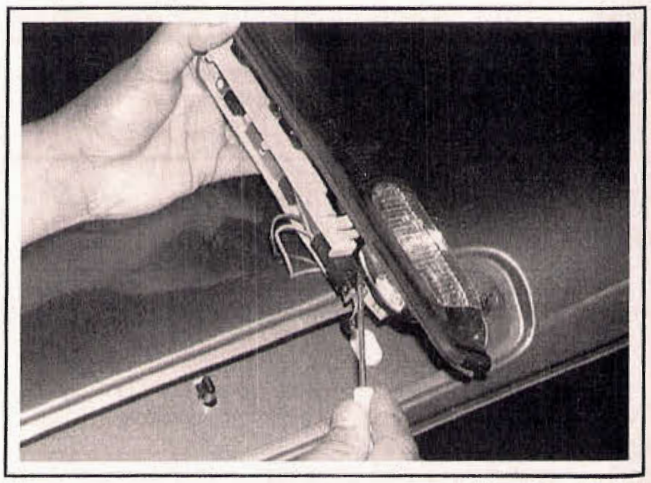

17.9b Release these tabs (arrows) to pull off the bulb holder plate

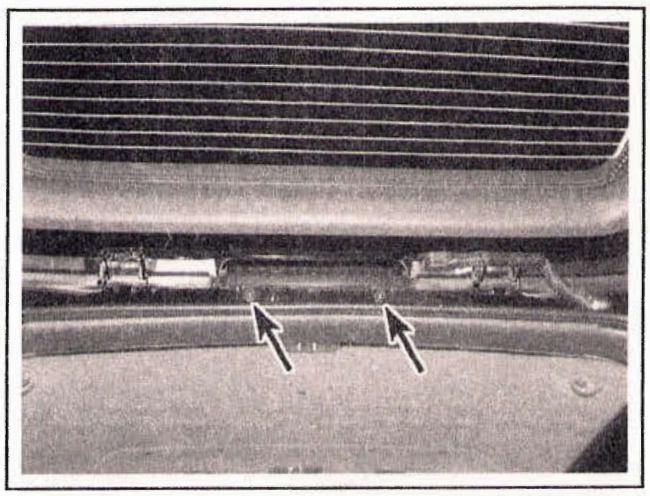

17.12 On SUV models, the CHMSL light assembly comes off once the screws (arrows) are removed

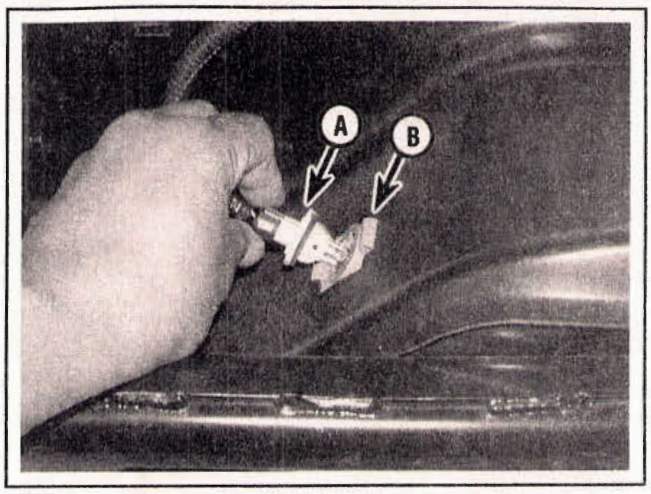

17.15 Reach up behind the bumper to rotate and remove the bulb holder (A) - if the light housing must be replaced, squeeze in the clips (B) and push the light to the outside of the bumper

and withdraw the CHMSL/cargo lamp housing from the cab (see illustration). Release the tabs at each end of the plate behind the four bulbs (see illustration).

10 Pull the bulb assembly away from the housing. The two outer bulbs are cargo lights and are removed by twisting a quarter-turn. The two center bulbs are the CHMSL bulbs and are pulled straight out of their holders.

11 Installation is the reverse of the removal procedure. Make sure the gasket on the back of the housing is intact, or a water leak could develop in the cab.

Suburban/Yukon models

12 On SUV models, raise the liftgate and remove the screws to access the bulb holders (see illustration).

13 On all models, rotate the bulb holder 1/4-turn clockwise and withdraw it, then replace the bulb by pulling it straight from the holder.

14 Installation is the reverse of removal.

LICENSE PLATE BULB

Refer to illustration 17.15

15 The license plate lamp is attached to the rear bumper, but the bulb holder can be removed by reaching up behind the bumper (see illustration). The bulb is pulled straight out of the holder.

16 Installation is the reverse of removal.

INSTRUMENT CLUSTER LIGHTS

Refer to illustrations 17.17 and 17.18

17 To gain access to the instrument cluster illumination lights, the instrument cluster will have to be removed (see Section 11). The bulbs can then be removed and replaced from the rear of the cluster, after removing a cover panel (see illustration).

18 Rotate the bulb counterclockwise to remove it (see illustration).

19 Installation is the reverse of removal.

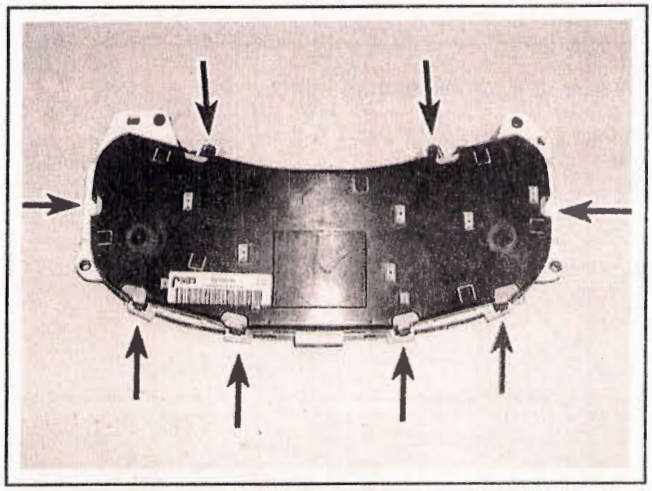

17.17 Release the clips (arrows) and remove the cover from the rear of the instrument cluster

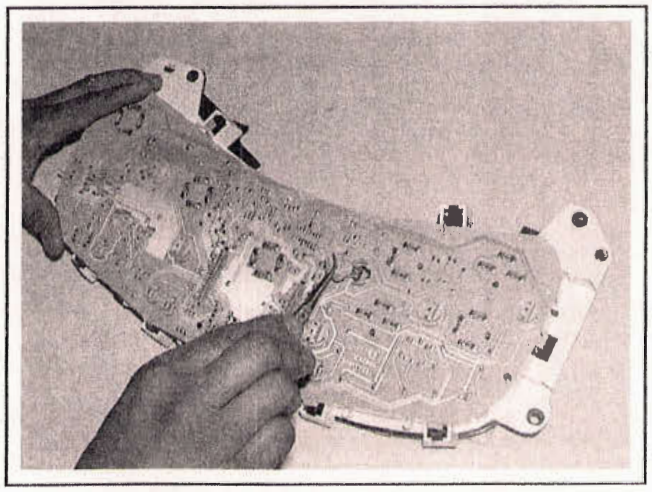

17.18 Use pliers or tweezers to rotate and remove the individual cluster lights

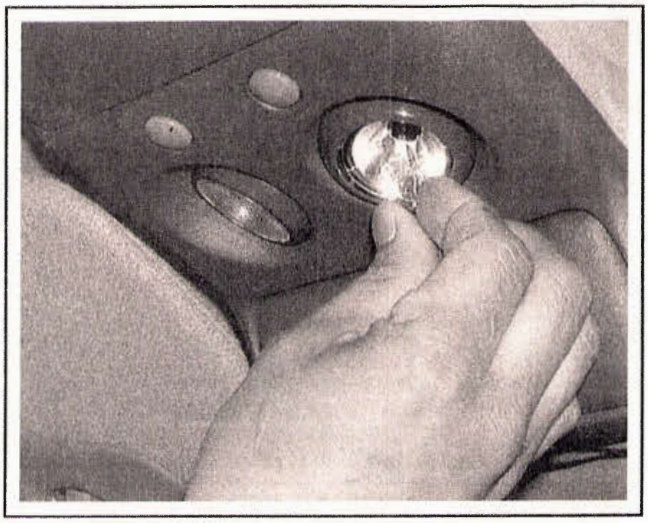

17.21 Remove the map light lens, then pull out the bulb (2000 model shown)

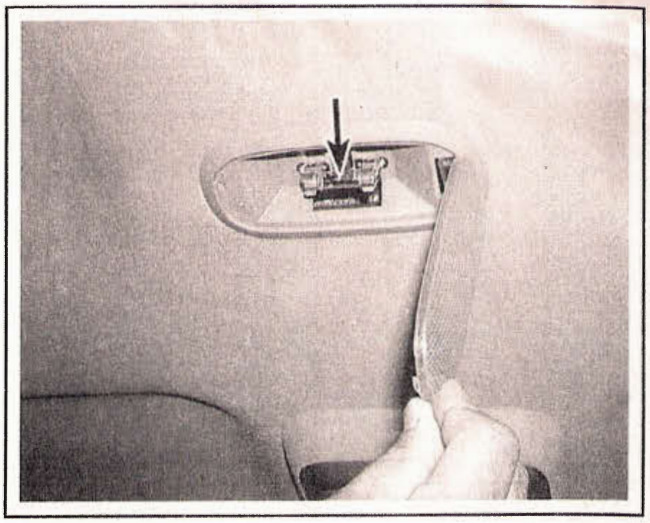

17.23a Pull the dome light bulb (arrow) straight down, out of its sockets (pick-up models)

INTERIOR LIGHTS

Overhead console reading lights

Refer to illustration 17.21

20 On 1999 models, push up on the reading light and twist counter-clockwise, then pull the light out and replace the bulb from behind it.

21 On 2000 models, use a small screwdriver to pry off the reading light lens, then remove the bulb (see illustration).

22 Installation is the reverse of removal.

Dome light

Refer to illustrations 17.23a and 17.23b

23 Pry the dome light lens off, then replace the bulb by pulling it straight out (see illustrations).

24 Installation is the reverse of removal.

Door courtesy lights

Refer to illustration 17.25

25 Pry the light out of the door panel and replace the bulb from the rear (see illustration).

26 Installation is the reverse of removal.

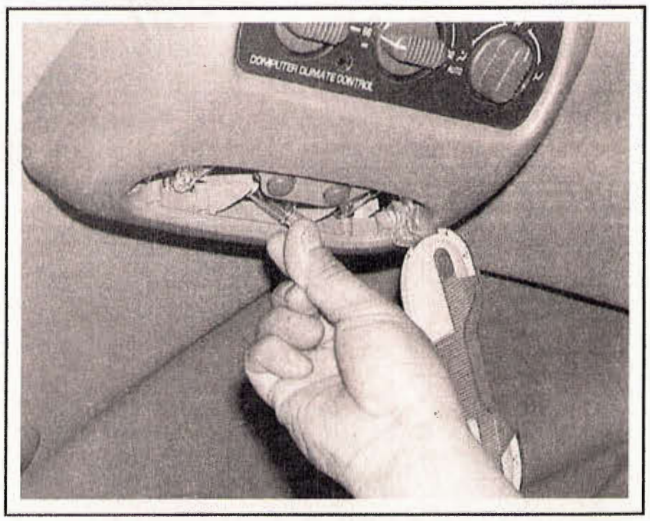

17.23b On SUV models, the dome light is in the middle overhead console - pry down the lens (from the left side) and pull out the tubular bulb

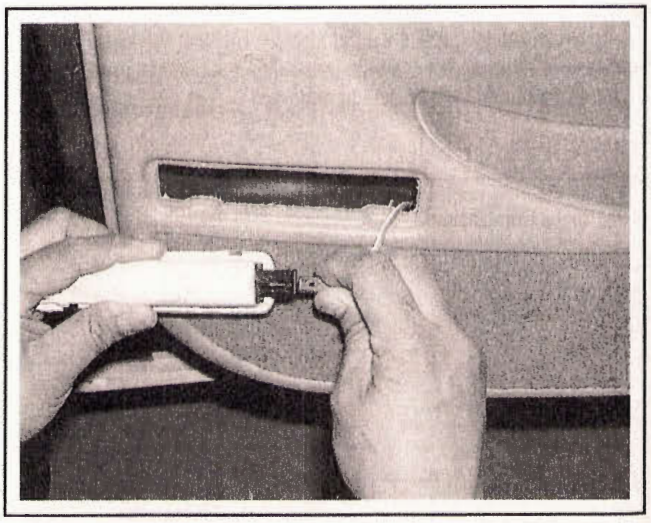

17.25 Pry the courtesy light out of the door panel, then remove the bulb holder from the end of the light housing

18 Wiper motor - check and replacement

FRONT

Refer to illustrations 18.2, 18.4 and 18.5

1 Disconnect the negative cable from the battery (see Chapter 1).

CAUTION:

On models equipped with the Theftlock audio system, be sure the lockout feature is turned off before performing any procedure which requires disconnecting the battery (see the front of this manual).

2 Mark the positions of the wiper arms on the windshield, then remove the wiper arms (see illustration).

Note: Disconnect the washer hose from the wiper arm.

3 Remove the cowl grille (see Chapter 11). Remove the four bolts and the reinforcement panel above the wiper assembly.

4 Disconnect the electrical connector at the wiper motor, then remove the wiper motor/linkage mounting bolts (see illustration).

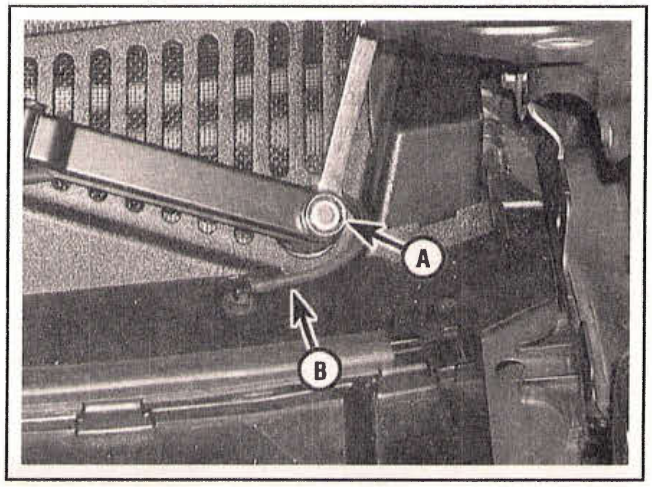

18.2 Lift the cover, use a wrench to remove the nut (A) on the wiper shaft, then grasp the wiper arm and use a rocking motion to detach it from the shaft - disconnect the washer hose (B)

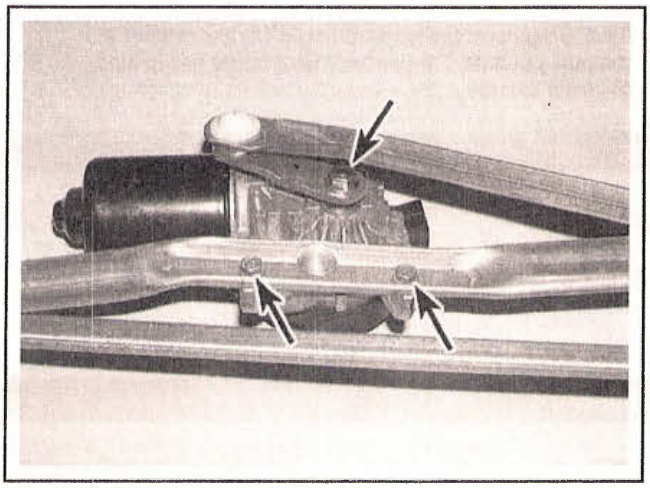

18.5 Remove the bolts (arrows) to separate the wiper motor from the linkage assembly

5 Remove the assembly and unbolt the motor from the linkage (see illustration). Pry the link from the wiper motor arm.

6 Installation is the reverse of removal.

REAR (SUV MODELS)

Refer to illustrations 18.8 and 18.10

7 Disconnect the negative cable from the battery (see Chapter 1).

CAUTION:

On models equipped with the Theftlock audio system, be sure the lockout feature is turned off before performing any procedure which requires disconnecting the battery (see the front of this manual).

8 Mark the positions of the wiper arm on the liftgate glass, then remove the wiper arm cover and nut at the outside of the liftgate, then the bezel (see illustration). Be careful not to scratch the paint on the liftgate.

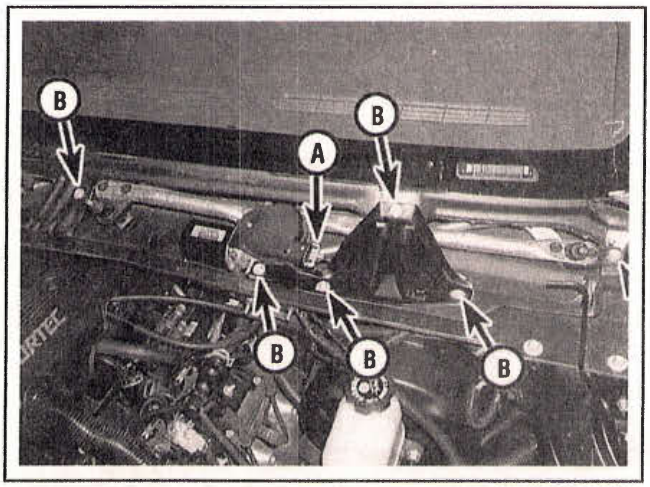

18.4 Wiper motor electrical connector (A) and wiper assembly mounting bolts (B) (later models have only two bolts)

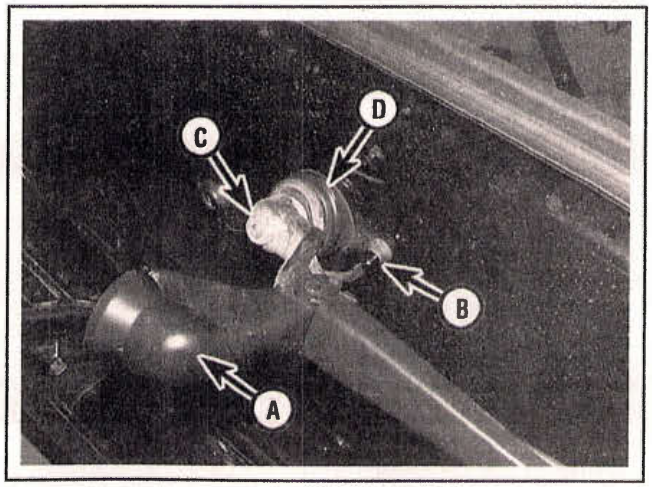

18.8 At the liftgate on SUV models, lift the cover (A), disconnect the washer hose (B), remove the nut (C), arm and bezel (D)

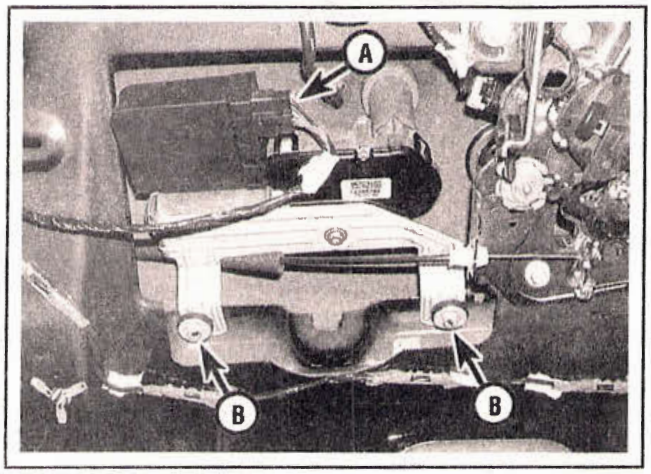

18.10 On SUV models, disconnect the electrical connector (A) at the rear wiper motor, then remove the two mounting bolts (B)

9 Refer to Chapter 11 and remove the upper and lower liftgate interior trim panels.

10 Disconnect the electrical connector at the rear wiper motor, then remove the two mounting bolts (see illustration).

***** CAUTION:**

Support the motor while removing the bolts.

11 Installation is the reverse of removal.

19 Horn - check and replacement

CHECK

Refer to illustration 19.2

1 Remove the cover from the underhood fuse/relay box (see illustration 3.1a) and check the horn fuse and relay, replacing any faulty components.

2 Disconnect the electrical connectors from the horns (see illustration). There are two horns, one at each lower corner of the radiator support.

3 Have an assistant press the horn button and use a voltmeter to make sure there is battery voltage at the supply wire terminal (see the wiring diagrams at the end of this Chapter). If the relay is good and there's no voltage at the horn, the wire (which leads to the relay) has a fault.

4 Use an ohmmeter to measure the resistance between the wiring connector black wire and a good ground. There should be zero ohms. If not, repair the fault in the ground circuit.

5 If there's voltage at the horn and the wiring circuits are good, the horn is faulty and must be replaced.

REPLACEMENT

6 Disconnect the electrical connectors, remove the mounting bolts and detach the horns (see illustration 19.2).

7 Installation is the reverse of removal.

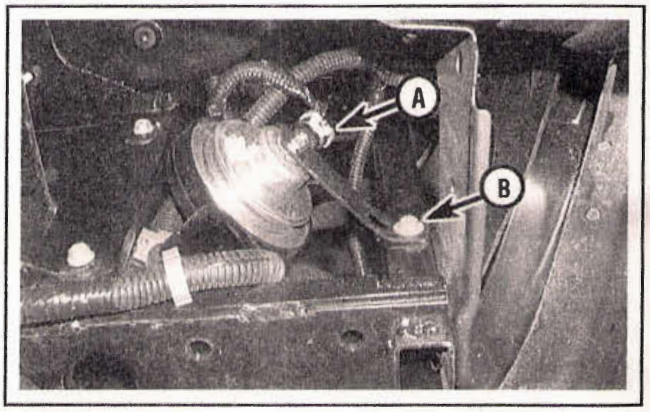

19.2 Disconnect the horn connector (A) and remove the mounting bolt (B) - shown here from below and behind the front bumper

20 Daytime Running Lights (DRL) - general information

The Daytime Running Lights (DRL) system used on all models illuminates the running lights, located in the front turn signal housings, whenever the ignition is On. The only exception is with the engine running and the parking brake engaged (standard-shift models) or with the shift lever in Park (automatic-transmission models). Once the parking brake is released or the shift lever is moved, the lights will remain on as long as the ignition switch is on.

21 Rear window defogger (SUV models) - check and repair

1 The rear window defogger consists of a number of horizontal heating elements baked onto the inside surface of the glass. Power is supplied through a large fuse from the underhood fuse/relay box in the engine compartment. The heater is controlled by the instrument panel switch.

2 Small breaks in the element can be repaired without removing the rear window.

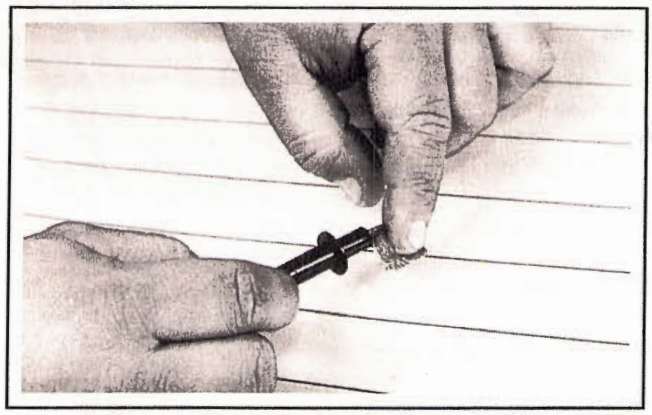

21.5 When measuring the voltage at the rear window defogger grid, wrap a piece of aluminum foil around the positive probe of the voltmeter and press the foil against the wire with your finger

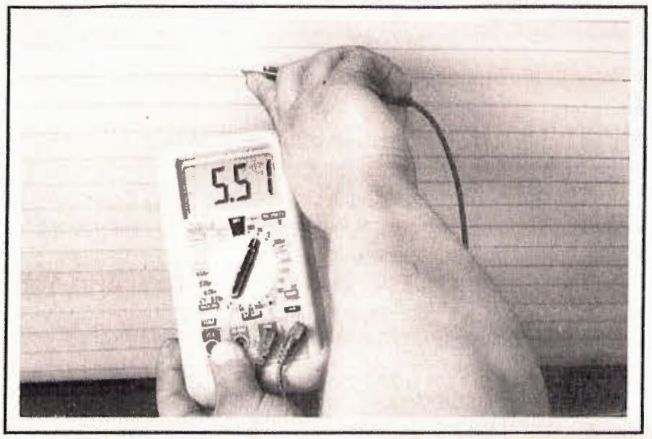

21.6 To determine if a heating element has broken, check the voltage at the center of each element - if the voltage is 6-volts, the element is unbroken

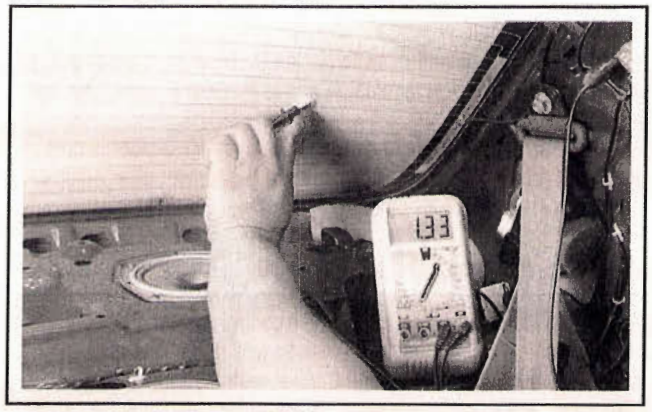

21.8 To find the break, place the voltmeter negative lead against the defogger ground terminal, place the voltmeter positive lead with the foil strip against the heat wire at the positive terminal end and slide it toward the negative terminal end - the point at which the voltmeter deflects from several volts to zero volts is the point at which the wire is broken

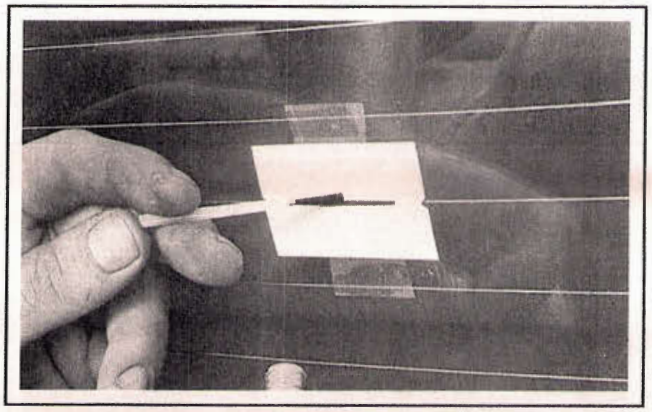

21.14 To use a defogger repair kit, apply masking tape to the inside of the window at the damaged area, then brush on the special conductive coating

CHECK

Refer to illustrations 21.5, 21.6 and 21.8

3 Turn the ignition switch and defogger switch to the ON position.

4 Using a voltmeter, place the positive probe against the defogger grid positive terminal and the negative probe against the ground terminal. If battery voltage is not indicated, check the fuse, defogger switch, defogger relay and related wiring. If voltage is indicated, but all or part of the defogger doesn't heat, proceed with the following tests.

5 When measuring voltage during the next two tests, wrap a piece of aluminum foil around the tip of the voltmeter positive probe and press the foil against the heating element with your finger (see illustration). Place the negative probe on the defogger grid ground terminal.

6 Check the voltage at the center of each heating element (see illustration). If the voltage is 5 to 6 volts, the element is okay (there is no break). If the voltage is 0 volts, the element is broken between the center of the element and the positive end. If the voltage is 10 to 12 volts the element is broken between the center of the element and the ground side. Check each heating element.

7 If none of the elements are broken, connect the negative probe to a good chassis ground. The voltage reading should stay the same; if it doesn't, the ground connection is bad.

8 To find the break, place the voltmeter negative probe against the defogger ground terminal. Place the voltmeter positive probe with the foil strip against the heating element at the positive side and slide it toward the negative side. The point at which the voltmeter deflects from several volts to zero is the point where the heating element is broken (see illustration).

REPAIR

Refer to illustration 21.14

9 Repair the break in the element using a repair kit specifically for this purpose, such as Dupont paste No. 4817 (or equivalent). The kit includes conductive plastic epoxy.

10 Before repairing a break, turn off the system and allow it to cool for a few minutes.

11 Lightly buff the element area with fine steel wool; then clean it thoroughly with rubbing alcohol.

12 Use masking tape to mask off the area being repaired.

13 Thoroughly mix the epoxy, following the kit instructions.

14 Apply the epoxy material to the slit in the masking tape, overlapping the undamaged area about 3/4-inch on either end (see illustration).

15 Allow the repair to cure for 24 hours before removing the tape and using the system.

22 Cruise control system - description and check

Refer to illustrations 22.5a, 22.5b and 22.7

MODELS WITHOUT ELECTRONIC THROTTLE CONTROL

1 The cruise control system maintains vehicle speed with a servo motor (located on the left side of the firewall) that is connected to the throttle linkage by a cable. The system consists of the servo motor, brake switch, cable, control switches, relay and associated wiring. Some features of the system require special testers and diagnostic procedures that are beyond the scope of the home mechanic. Listed below are some general procedures that may be used to locate common problems.

2 Check the cruise control fuse in the interior fuse/relay box at the left-hand end of the instrument panel (see Section 3).

3 The brake pedal position (BPP) switch (or brake light switch) deactivates the cruise control system. Have an assistant press the brake pedal while you check the brake light operation.

4 If the brake lights do not operate properly, correct the problem and retest the cruise control.

5 Check the control cable between the cruise control servo/amplifier and the throttle linkage and replace as necessary (see illustrations). To adjust the cable at the throttle end, some models have a screw-thread adjuster, and others have a clip-type. On the screw-threaded type, make sure the throttle is in the fully-closed position and adjust the plastic screw until slack is removed in the cruise cable. On models equipped with the clip-type, release the lock-clip at the cable housing end (at the throttle linkage) by squeezing the sides of the clip together until the clip can be pulled out of the adjuster. Now move the cable by hand to remove any slack, then push the lock-clip back in.

➡Note: Make sure the white mark on the side of the clip can no longer be seen. This ensures that the clip is fully seated.

6 The cruise control system uses information from the PCM, including the Vehicle Speed Sensor, which is located in the transmission. To test the speed sensor, see Chapter 6.

7 Some tests of the servo can be made by the home mechanic. Turn the ignition key to On (engine not running). Disconnect the electrical connector at the servo and use a grounded test light to check for battery power at terminal F on the harness side (see illustration). If power isn't there, refer to the wiring diagrams at the end of this Chapter and check the circuit.

8 With the cruise control switch in the On position, there should be battery voltage present in terminal A, and at terminal B in the Set/Coast position.

9 Test-drive the vehicle to determine if the cruise control is now working. If it isn't, take it to a dealer service department or an automotive electrical specialist for further diagnosis.

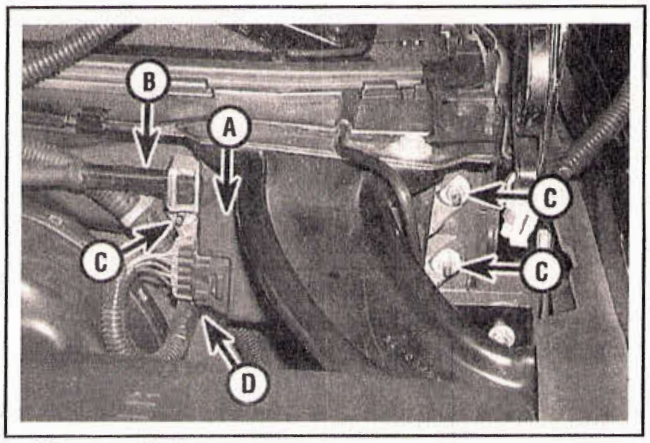

22.5a The cruise control servo (A) is located at the left end of the firewall - make sure the cruise control cable (B) is not damaged and that it operates smoothly when the throttle is opened. C indicates the servo mounting nuts, and D is the electrical connector

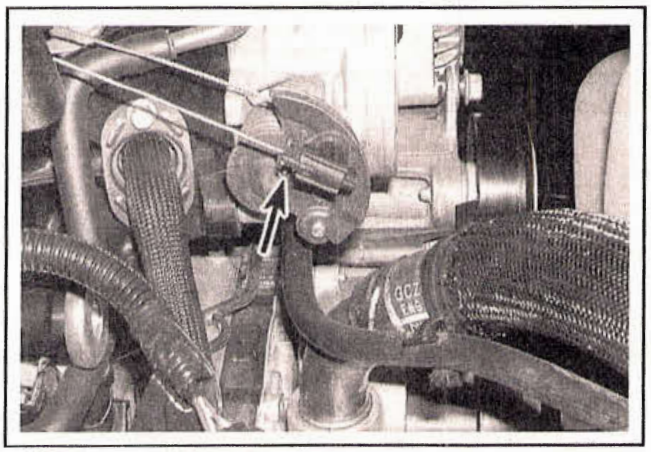

22.5b Adjust the cruise control cable by turning the thumbscrew (arrow) to remove slack (not all models)

MODELS WITH ELECTRONIC THROTTLE CONTROL

10 From inside the vehicle, the cruise control system on models with Electronic Throttle Control seems identical to the system used on models without Electronic Throttle Control, with the same indicators on the cluster, the same cruise control switch on the steering wheel, same brake and clutch pedal position switches, etc. However, there is no cruise control servo motor or cable. Instead, the cruise control system is under the direct control of the Powertrain Control Module (PCM). Under the hood, there is no servo, nor servo cable, because these models have an electronically-controlled throttle body (no accelerator cable). When you select the speed that you want to maintain, the PCM controls vehicle speed by opening and closing the throttle plate by means of a computer-controlled solenoid (motor) inside the throttle body.

11 The diagnostic procedures for troubleshooting the cruise control system are beyond the scope of this manual, but if the system can't be set, or the set speed doesn't cancel when the brake pedal is depressed, check the fuses.

12 Other than checking the fuses, the diagnostic procedures for troubleshooting the cruise control system on models with Electronic Throttle Control are beyond the scope of this manual. A dealer service department or other qualified repair shop should handle any further testing.

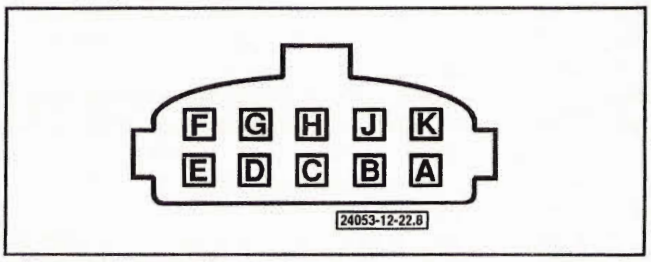

22.7 Pin identification for the cruise control servo connector

23 Power window system - description and check

Refer to illustrations 23.12a and 23.12b

1 The power window system operates electric motors, mounted in the doors, which lower and raise the windows. The system consists of the control switches, the motors, regulators, glass mechanisms and associated wiring.

2 The power windows can be lowered and raised from the master control switch by the driver or by remote switches located at the individual windows. Each window has a separate motor that is reversible. The position of the control switch determines the polarity and therefore the direction of operation.

3 The circuit is protected by a fuse and a circuit breaker. Each motor is also equipped with an internal circuit breaker; this prevents one stuck window from disabling the whole system.

4 The power window system will only operate when the ignition switch is ON. In addition, many models have a window lockout switch at the master control switch which, when activated, disables the switches at the rear windows and, sometimes, the switch at the passenger's window also. Always check these items before troubleshooting a window problem.

5 These procedures are general in nature, so if you can't find the problem using them, take the vehicle to a dealer service department or other properly equipped repair facility.

6 If the power windows won't operate, always check the fuse and circuit breaker first.

7 If only the rear windows are inoperative (SUV), or if the windows only operate from the master control switch, check the rear window lockout switch for continuity in the unlocked position. Replace it if it doesn't have continuity.

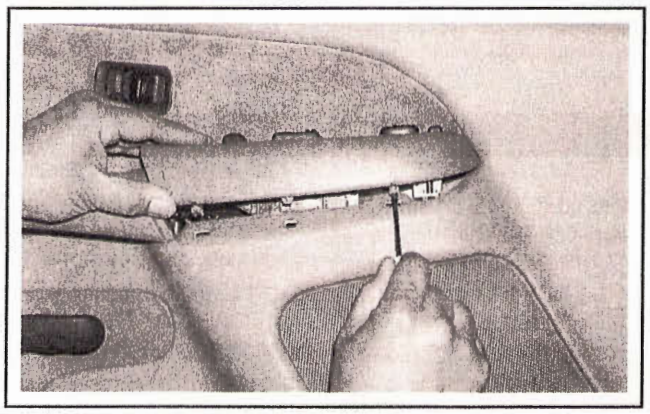

23.12a Pry up the driver's door switch assembly from the door panel

8 Check the wiring between the switches and fuse panel for continuity. Repair the wiring, if necessary.

9 If only one window is inoperative from the master control switch, try the other control switch at the window.

Note: This doesn't apply to the driver's door window.

10 If the same window works from one switch, but not the other, check the switch for continuity.

11 If the switch tests OK, check for a short or open in the circuit between the affected switch and the window motor.

12 If one window is inoperative from both switches, Use a flat-bladed trim tool to pry up and remove the switch panel from the affected door. Check for voltage at the switch (see illustrations) and at the motor (refer to Chapter 11 for door panel removal) while the switch is operated.

13 If voltage is reaching the motor, disconnect the glass from the regulator (see Chapter 11). Move the window up and down by hand while checking for binding and damage. Also check for binding and damage to the regulator. If the regulator is not damaged and the window moves up and down smoothly, replace the motor. If there's binding or damage, lubricate, repair or replace parts, as necessary.

14 If voltage isn't reaching the motor, check the wiring in the circuit for continuity between the switches and motors. You'll need to consult the wiring diagram at the end of this Chapter. If the circuit is equipped with a relay, check that the relay is grounded properly and receiving voltage.

15 Test the windows after you are done to confirm proper repairs.

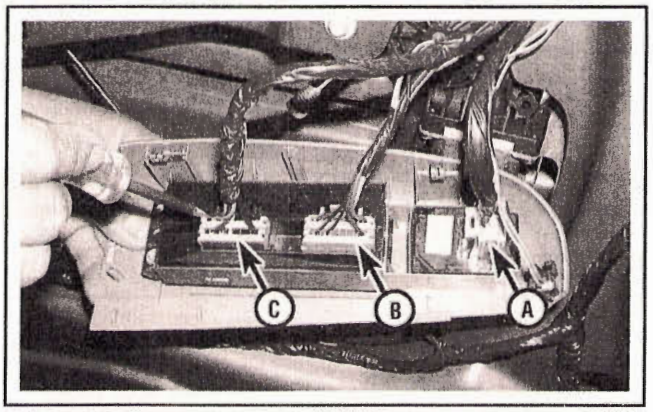

23.12b There are several switch connectors in the driver's door module: the mirror switch (A), and the window/door connectors (B and C) - disconnect the electrical connector at the switch, then squeeze the clips to remove a switch

24 Power door lock and keyless entry system - description and check

Refer to illustration 24.10

1 The power door lock system operates the door lock actuators mounted in each door. The system consists of the switches, actuators, relays and associated wiring. Diagnosis can usually be limited to simple checks of the wiring connections and actuators for minor faults that can be easily repaired.

2 Power door lock systems are operated by bi-directional solenoids located in the doors. The lock switches have two operating positions: Lock and Unlock. These switches activate a relay, which in turn connects voltage to the door lock solenoids. Depending on which way the relay is activated, it reverses polarity, allowing the two sides of the circuit to be used alternately as the feed (positive) and ground side.

3 Some vehicles may have keyless entry, electronic control modules and anti-theft systems incorporated into the power locks. If you are unable to locate the trouble using the following general steps, consult your dealer service department.

Note: Some vehicles also have control switches connected to the key locks in the doors, which unlock all the doors when one is unlocked.

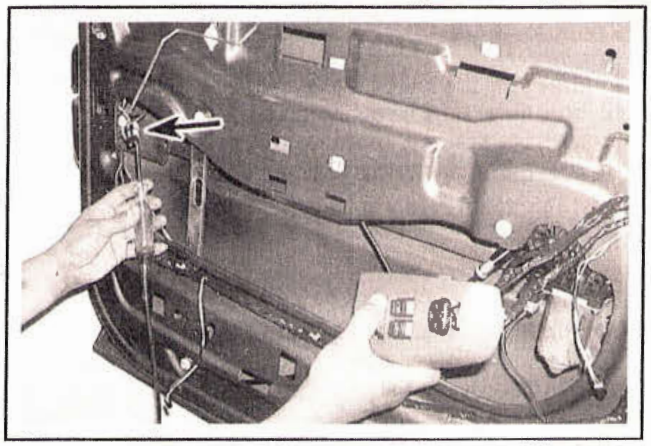

24.10 To test a door lock solenoid, check that power is getting to the solenoid connector (arrow) while the switch is operated

4 Always check the circuit protection first. Some vehicles use a combination of circuit breakers and fuses. Refer to the wiring diagrams at the end of this Chapter.

5 Operate the door lock switches in both directions (Lock and Unlock) with the engine off. Listen for the faint click of the relay operating.

6 If there's no click, check for voltage at the switches. If no voltage is present, check the wiring between the fuse panel and the switches for shorts and opens.

7 If voltage is present but no click is heard, test the switch for continuity. Replace it if there's not continuity in both switch positions. To remove the switch, use a flat-bladed trim tool to pry out the door/window switch assembly (see Chapter 11).

8 If the switch has continuity but the relay doesn't click, check the wiring between the switch and relay for continuity. Repair the wiring if there's no continuity.

9 If the relay is receiving voltage from the switch but is not sending voltage to the solenoids, check for a bad ground at the relay case. If the relay case is grounding properly, replace the relay. Relay tests are described in Section 5.

10 If all but one lock solenoids operate, remove the trim panel from the affected door (see Chapter 11) and check for voltage at the solenoid while the lock switch is operated (see illustration). One of the wires should have voltage in the Lock position; the other should have voltage in the Unlock position.

11 If the inoperative solenoid is receiving voltage, replace the solenoid.

12 If the inoperative solenoid isn't receiving voltage, check for an open or short in the wire between the lock solenoid and the relay.

➡Note: It's common for wires to break in the portion of the harness between the body and door (opening and closing the door fatigues and eventually breaks the wires).

13 On the models covered by this manual, power door lock system communication goes through the Body Control Module. If the above tests do not pinpoint a problem, take the vehicle to a dealer or qualified shop with the proper scan tool to retrieve trouble codes from the BCM.

KEYLESS ENTRY SYSTEM

14 The keyless entry system consists of a remote control transmitter that sends a coded infrared signal to a receiver, which then operates the door-lock system.

15 Replace the battery when the transmitter doesn't operate the locks at a distance of 10 feet. Normal range should be about 30 feet.

16 Use a small screwdriver to carefully separate the case halves.

17 Replace the three-volt, CR2032 lithium battery.

18 Snap the case halves together.

25 Electric side view mirrors - description and check

SIDE MIRROR

1 The electric rear view mirrors use two motors to move the glass; one for up and down adjustments and one for left-right adjustments.

2 The control switch has a selector portion which sends voltage to the left or right side mirror. With the ignition in the ACC position and the engine OFF, roll down the windows and operate the mirror control switch through all functions (left-right and up-down) for both the left and right side mirrors.

3 Listen carefully for the sound of the electric motors running in the mirrors.

4 If the motors can be heard but the mirror glass doesn't move, there's probably a problem with the drive mechanism inside the mirror. Power mirrors have no user-serviceable parts inside - a defective mirror must be replaced as a unit (see Chapter 11).

5 If the mirrors don't operate and no sound comes from the mirrors, check the Mirr/Lock fuse in the fuse block located in interior fuse/relay box, and the Htd/Mirr fuse in the underhood fuse/relay box (see Section 3).

6 If the fuses are OK, remove the switch panel for access to the back of the mirror control switch without disconnecting the wires attached to it (see illustration 23.12b). Turn the ignition ON and check for voltage at the switch. There should be voltage at one terminal. If there's no voltage at the switch, check for an open or short in the wiring between the fuse panel and the switch.

7 If there's voltage at the switch, disconnect it. Check the switch for continuity in all its operating positions. If the switch does not have continuity, replace it.

8 Locate the wire going from the switch to ground. Leaving the switch connected, connect a jumper wire between this wire and ground. If the mirror works normally with this wire in place, repair the faulty ground connection.

9 If the mirror still doesn't work, remove the mirror and check the wires at the mirror for voltage. Check with ignition ON and the mirror selector switch on the appropriate side. Operate the mirror switch in all its positions. There should be voltage at one of the switch-to-mirror wires in each switch position (except the neutral "off" position).

10 If voltage is absent in each switch position, check the wiring between the mirror and control switch for opens and shorts.

11 If there's voltage, remove the mirror and test it off the vehicle with jumper wires. Replace the mirror if it fails this test.

AUTOMATIC/DAY NIGHT MIRROR

12 To reduce glare, the automatic day/night mirror adjusts the amount of light reflected according to conditions. This is achieved with two photocell sensors, one facing forward and one facing rearward, that

darken or lighten the thin layer of electrochromic material incorporated into the mirror glass. On some models, the mirror also incorporates a display, turned on by switches at the bottom of the mirror, that shows an illuminated compass or a thermometer. The display is in the upper right corner of the mirror.

13 If the mirror is not operating, check the IGN 1 fuse in the interior fuse/relay box (see Section 3).

14 Disconnect the electrical connector from the front side of the mirror. With the ignition On, the connector cavity with the pink wire should have battery voltage.

15 With the ignition Off, the cavity with the black wire should have continuity to ground. If not, there is a loose ground connection in the circuit.

16 With the connector in place and the ignition On, cover the forward facing sensor, shine a light into the rear facing sensor, make sure the glass darkens, then shift the transmission into reverse and make sure it lightens. If it doesn't, replace the mirror (see Chapter 11). The automatic mirror function is wired into the back-up switch, to lighten the mirror for safety when backing up.

26 Power seats - description and check

1 Power seats allow you to adjust the position of the seat with little effort. These models feature a six-way seat that goes forward and backward, up and down and tilts forward and backward. The seats are powered by three reversible motors, mounted in one housing, that are controlled by switches on the side of the seat. Each switch changes the direction of seat travel by reversing polarity to the drive motor.

2 Diagnosis is a simple matter, using the following procedures.

3 Look under the seat for any object which may be preventing the seat from moving.

4 If the seat won't work at all, check the 25-amp Seats circuit breaker in the left-side interior fuse/relay box. See Section 4 for circuit breaker testing.

5 With the engine off to reduce the noise level, operate the seat controls in all directions and listen for sound coming from the seat motors.

6 If the motors make noise or don't work, check for voltage at the motors while an assistant operates the switch. With the door open, try the seat switch again. If the dome light dims while trying to operate the seat, this indicates something may be jammed in the seat tracks.

7 If the motor is getting voltage but doesn't run, test it off the vehicle with jumper wires. If it still doesn't work, replace it.

8 If the motor isn't getting voltage, remove the switch and check for voltage. If there's no voltage to the switch (orange wire), check the wiring between the fuse block and the switch. If there's battery voltage at the switch, check the other terminals for voltage while moving the switch around. If the switch is OK, check for a short or open in the wiring between the switch and motor.

9 Test the completed repairs.

27 Data Link Communication system - description

1 The vehicles covered by this manual have a complex electrical system, encompassing many power accessories, and a number of separate electronic modules.

2 The Powertrain Control Module (PCM) is mainly responsible for engine and transaxle control, but also communicates with other modules around the vehicle through a Data Link Communication system, which sends serial port data very quickly between the various modules. Many of the computer functions involved in the operation of body systems are routed through the Body Control Module (BCM), which communicates with the PCM.

3 Among the modules in the Data Link system besides the BCM and PCM are the Sensing Diagnostic Module (airbag system), the Electronic Brake Control Module, Vehicle Control Module and the instrument panel cluster. The BCM further communicates with various body subsystems.

4 All of the modules in the vehicle have associated trouble codes. When other troubleshooting procedures fail to pinpoint the problem, check the wiring diagrams at the end of this Chapter to see if the BCM or PCM are involved in the circuit. If so, bring your vehicle to a dealer with the factory diagnostic tools to extract the trouble codes.

28 Airbag system - general information

♦ Refer to illustrations 28.1, 28.8, 28.13 and 28.15

1 These models are equipped with a Supplemental Restraint System (SRS), more commonly known as airbags, designed to protect the driver and front seat passenger from serious injury in the event of a head-on or frontal collision. All models have a sensing/diagnostic control unit, located under the driver's seat, below the carpeting (see illustration).

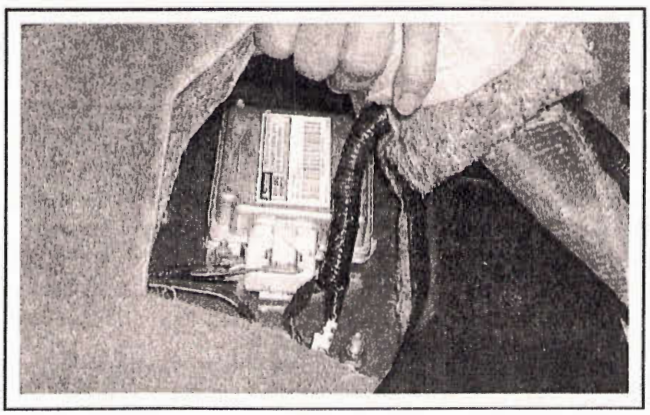

28.1 The airbag control module is located under the driver's seat - do not tamper with the yellow connectors attached to it

WARNING:

If your vehicle is ever involved in a flood, or the interior carpeting is soaked for any reason, disconnect the battery and do not start the vehicle until the airbag system can be checked by your dealer. If the SRS system is subjected to flooding, the airbags could go off upon starting the vehicle, even without an accident taking place.

AIRBAG MODULES

2 The airbag modules consist of a housing incorporating the cushion (airbag) and inflator unit. The inflator assembly is mounted on the back of the housing over a hole through which gas is expelled, inflating the bag almost instantaneously when an electrical signal is sent from the system. The specially wound wire on the driver's side that carries this signal to the driver's module is called a clockspring. The clockspring is a flat, ribbon-like electrically conductive tape that is wound many times so that it can transmit an electrical signal regardless of steering wheel position. Airbag modules are located in the steering wheel, on the passenger side above the glove box, and on some 2000 and later SUV models, at the upper side of each front seat (side-impact airbags).

SENSING/DIAGNOSTIC CONTROL UNIT AND SENSORS

3 The sensing/diagnostic control unit contains an on-board microprocessor which monitors the operation of the system, and also contains a crash sensor. It checks this system every time the vehicle is started, causing the "AIRBAG" light to flash seven times then go off, if the system is operating properly. If there is a fault in the system, the light may not come on at all, or the light will go on and continue, either illuminated steadily or blinking, and the unit will store fault codes indicating the nature of the fault.

4 Another impact-activated sensor, called the discriminating sensor is mounted to the underside of the radiator support.

OPERATION

5 For the airbag(s) to deploy, the discriminating sensor and the impact sensor in the sensing/diagnostic control unit must be activated. When this condition occurs, the circuit to the airbag inflator is closed and the airbag inflates. If the battery is destroyed by the impact, or is too low to power the inflator, a back-up power unit inside the SRS system provides power.

SELF-DIAGNOSIS SYSTEM

6 A self-diagnosis circuit in the SRS unit displays a light on the instrument panel when the ignition switch is turned to the On position. If the system is operating normally, the light should go out after about seven blinks. If the light doesn't come on, or doesn't go out after a short time, or if it comes on while you're driving the vehicle, or if it blinks at any time, there's a malfunction in the SRS system. Have it inspected and repaired as soon as possible. Do not attempt to troubleshoot or service the SRS system yourself. Even a small mistake could cause the SRS system to malfunction when you need it.

SERVICING COMPONENTS NEAR THE SRS SYSTEM

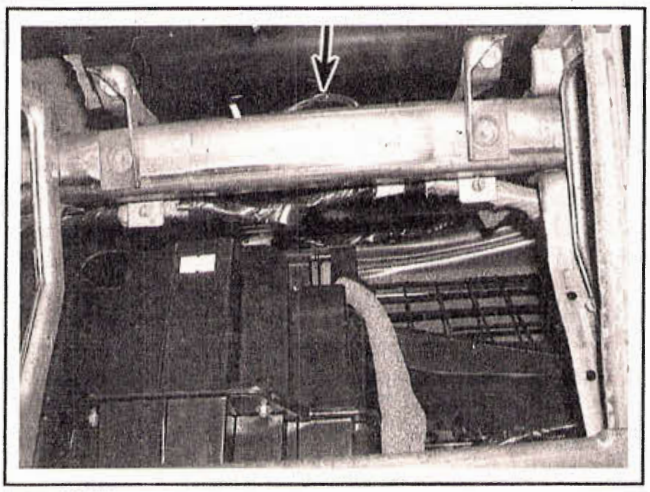

28.8 Disconnect the passenger airbag connector (arrow) behind the glove box area

7 Nevertheless, there are times when you need to remove the steering wheel, radio or service other components on or near the dashboard. At these times, you'll be working around components and wire harnesses for the SRS system. Do not use electrical test equipment on airbag system wires; it could cause the airbag(s) to deploy. **ALWAYS DISABLE THE SRS SYSTEM BEFORE WORKING NEAR THE SRS SYSTEM COMPONENTS OR RELATED WIRING.**

DISABLING THE SRS SYSTEM

WARNING:

Any time you are working in the vicinity of airbag wiring or components, DISABLE THE SRS SYSTEM.

8 To disable the airbag system, perform the following steps:

a) Turn the steering wheel to the straight-ahead position and turn the ignition switch to the Lock position, then remove the key.

b) Remove the airbag fuse located in the interior fuse/relay box at the left end of the instrument panel.

c) Wait at least two minutes for the back up power supply to be depleted before beginning work.

d) Remove the driver's knee bolster (see Chapter 11) and disconnect the driver's airbag connector at the steering column (see Chapter 10).

e) Open and drop the glove box door (see Chapter 11) and disconnect the connector to the passenger airbag (see illustration).

ENABLING THE SYSTEM

9 To enable the airbag system, perform the following steps:

a) Turn the ignition switch to the Lock position and remove the key.

b) Reconnect the passenger and driver's airbag connectors, making sure the CPA (Connector Position Assurance) clips are in place so the connectors can't accidentally disengage.

c) Reinsert the airbag fuse.

d) Turn the ignition switch to the On position. Confirm that the airbag warning light glows for 6 to 8 seconds, then goes out, indicating the system is functioning properly.

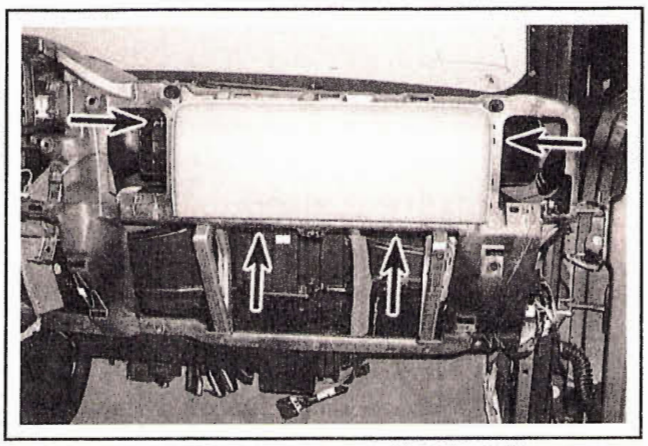

28.13 Remove the passenger airbag module mounting bolts (arrows) and lift the module out of the instrument panel

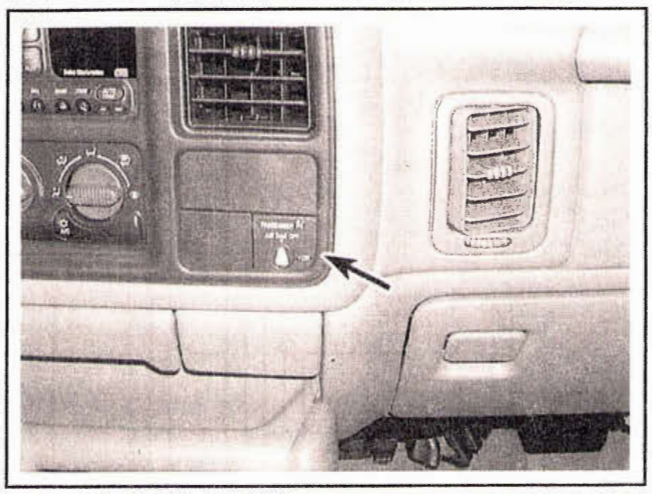

28.16 The passenger airbag On/Off switch (arrow) is mounted at the center of the instrument panel

REMOVAL AND INSTALLATION

Driver's airbag

10 Disable the airbag system (see Step 8). Refer to Chapter 10, Section 17 for removal and installation of the driver's side airbag.

Passenger airbag

11 Disable the airbag system (see Step 8).

12 Remove the glove box and the air outlets on either side of the airbag module (see Chapter 11).

13 Remove the screws and gently pry the airbag unit from the back of the dashboard (see illustration).

CAUTION:

The airbag assembly is heavier than it looks, use both hands when removing it from the dash.

14 Installation is the reverse of the removal procedure.

Side-impact airbags

15 Some SUV models have side-impact airbags located in the edge of the seatback facing the door. To disable these airbags (after following Steps 8A through 8E), disconnect the yellow two-wire connectors under the driver and passenger seats.

PASSENGER AIRBAG ON/OFF SWITCH

16 The models covered by this manual have a switch at the center of the instrument panel that can turn the passenger airbag module Off (see illustration). If an infant in a car seat, a child under 12 or a person with special medical conditions must ride in the front passenger seat, the driver can turn the passenger airbag Off. Read your owner's manual for more information on risk groups for the passenger airbag.

17 Inserting the vehicle key, push in the switch and turn to either the On or Off position, then remove the key. Once that passenger is no longer using the right front seat, you should turn the airbag back On again to provide maximum crash protection for adult passengers.

WARNING:

The key should never be left in the switch.

29 Wiring diagrams - general information

Since it isn't possible to include all wiring diagrams for every year and model covered by this manual, the following diagrams are those that are typical and most commonly needed.

Prior to troubleshooting any circuits, check the fuse and circuit breakers (if equipped) to make sure they're in good condition. Make sure the battery is properly charged and check the cable connections (see Chapter 1).

When checking a circuit, make sure that all connectors are clean, with no broken or loose terminals. When disconnecting a connector, do not pull on the wires. Pull only on the connector housings themselves.

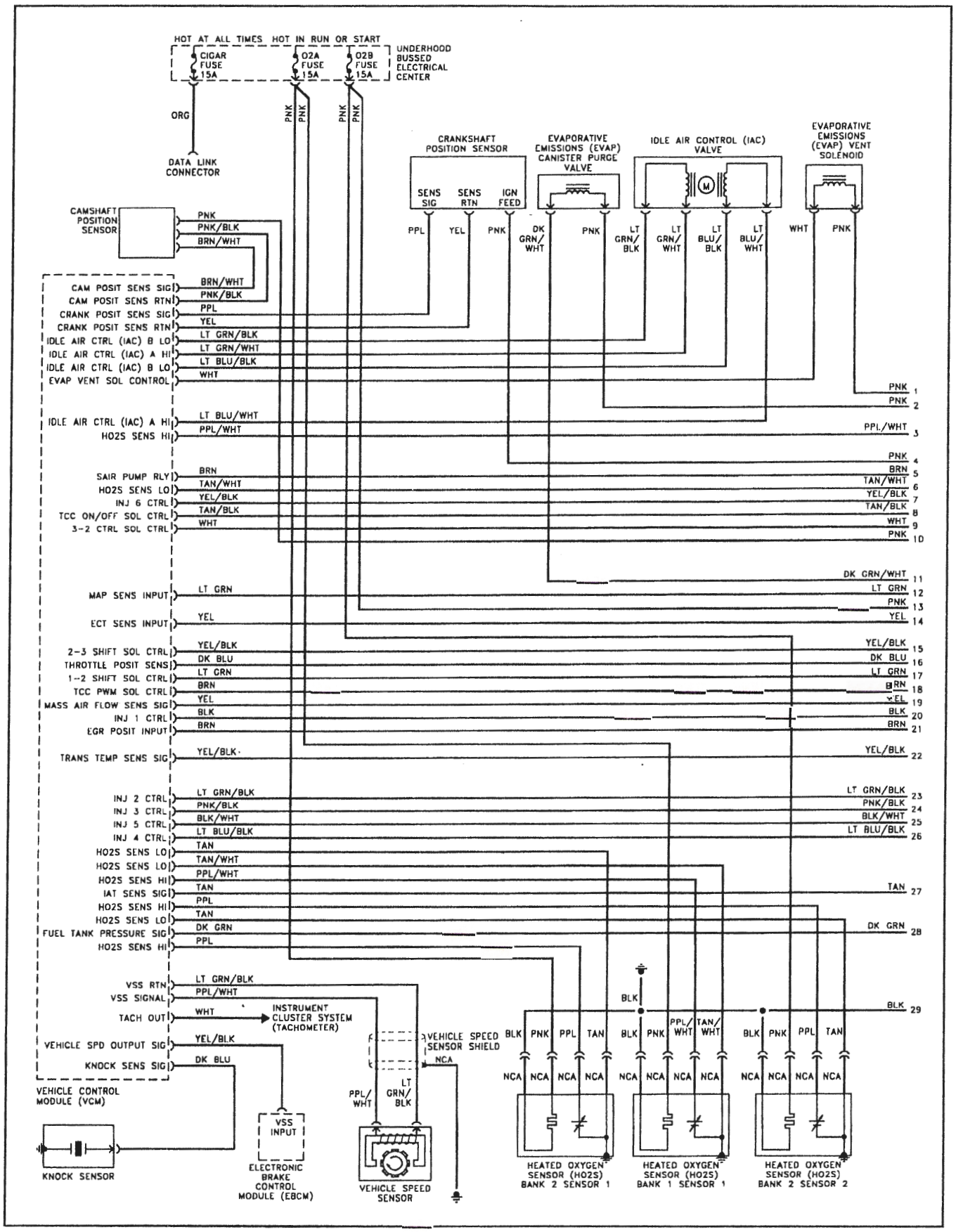

Engine control system – typical V6 (part 1 of 4)

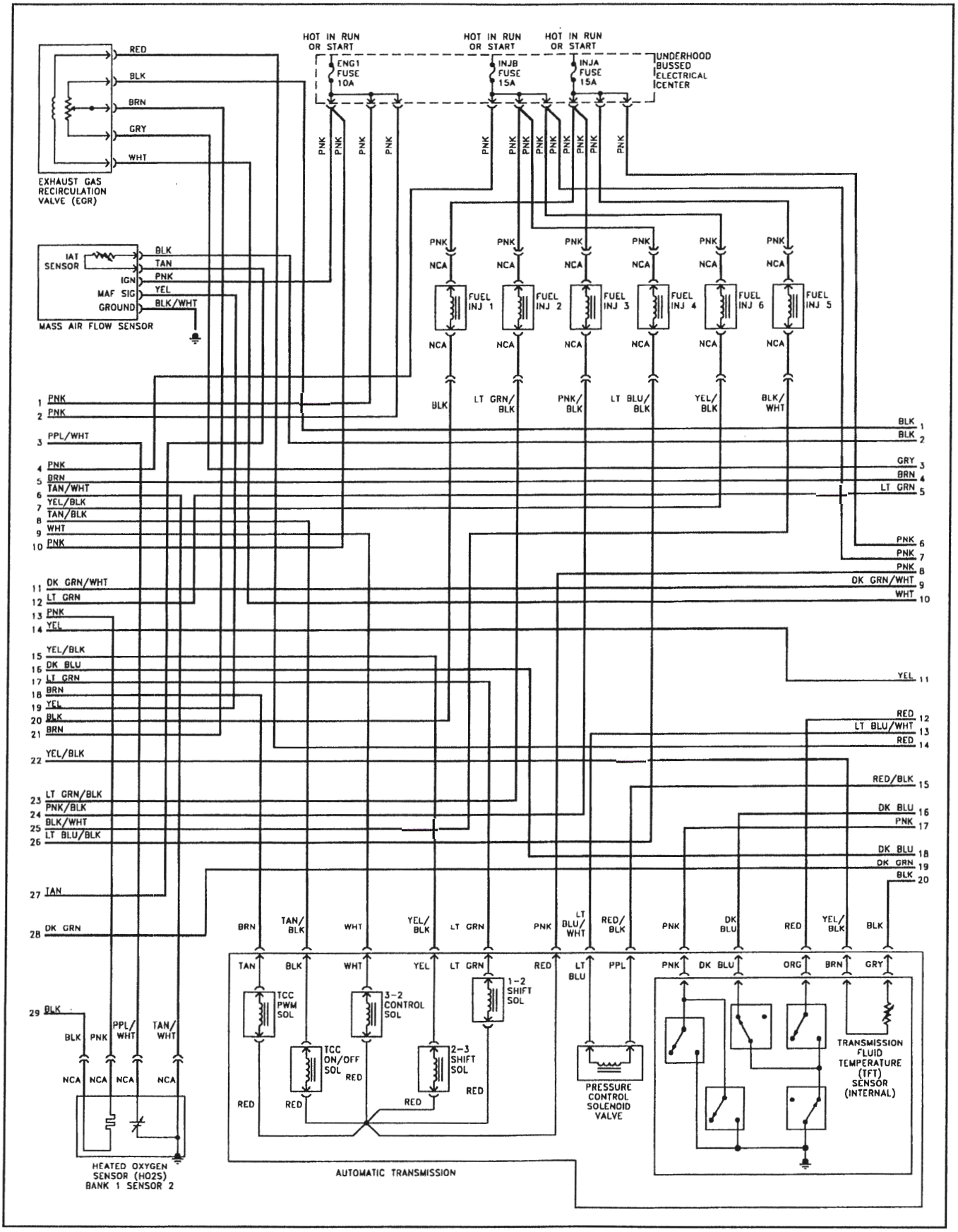

Engine control system – typical V6 (part 2 of 4)

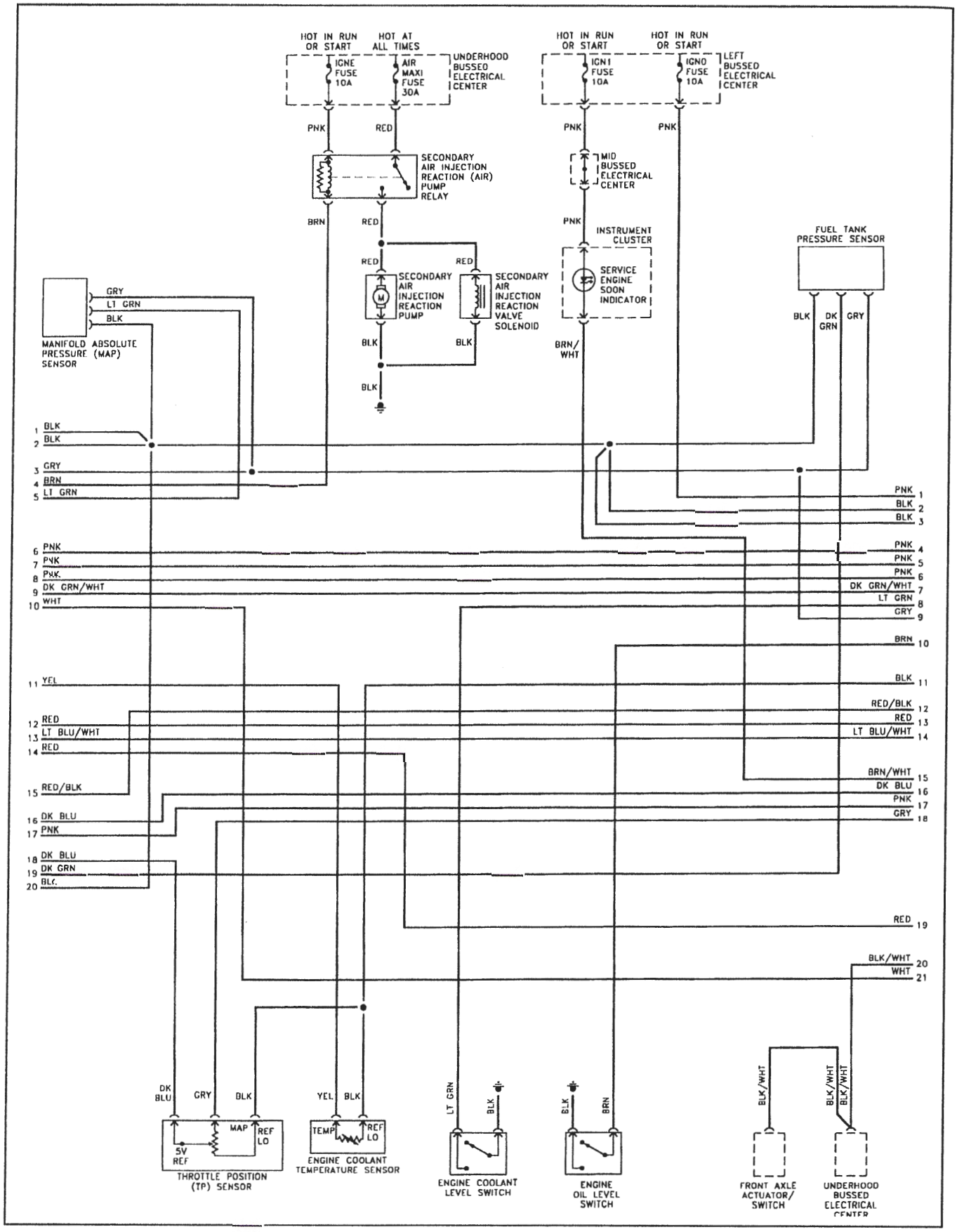

Engine control system – typical V6 (part 3 of 4)

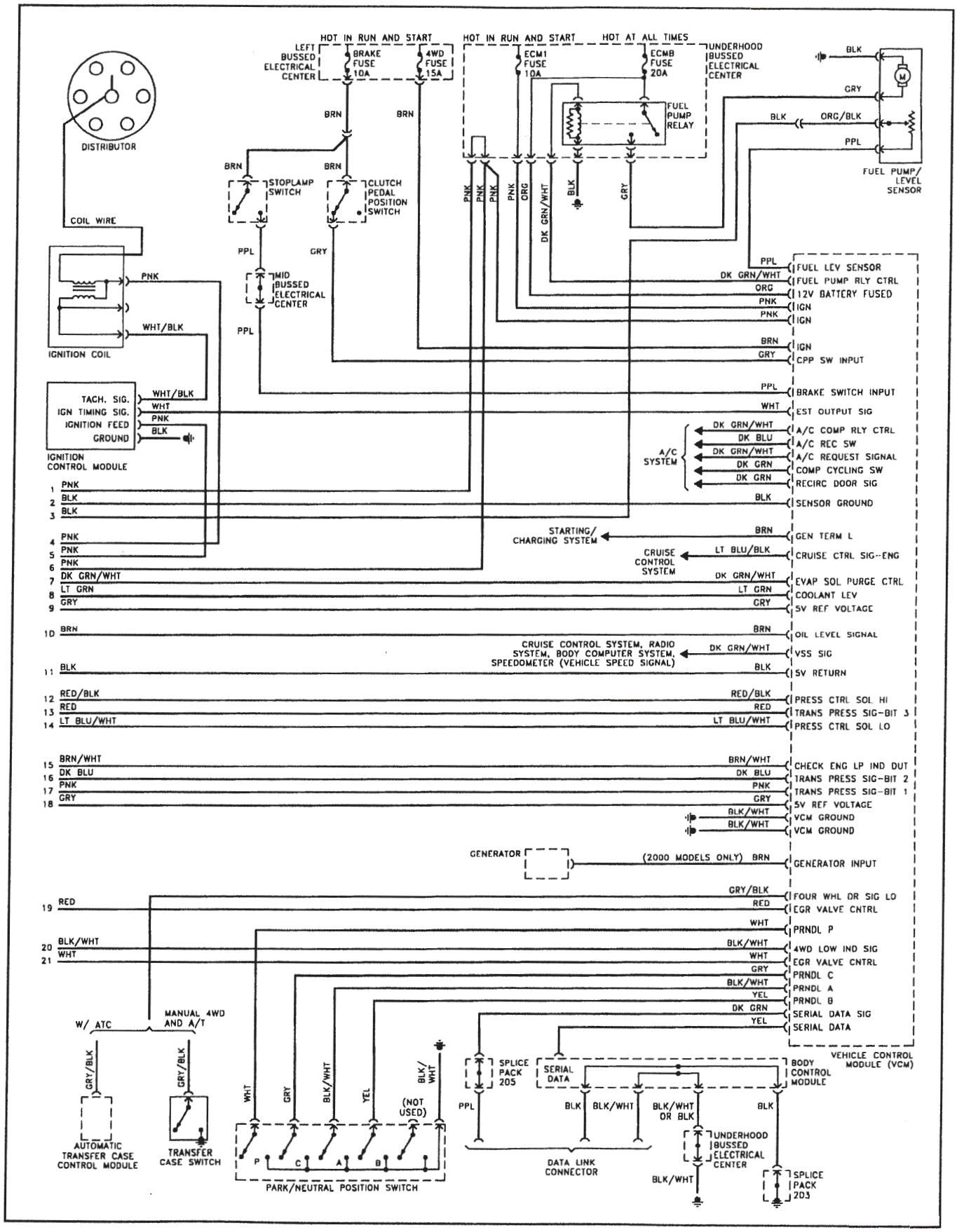

Engine control system – typical V6 (part 4 of 4)

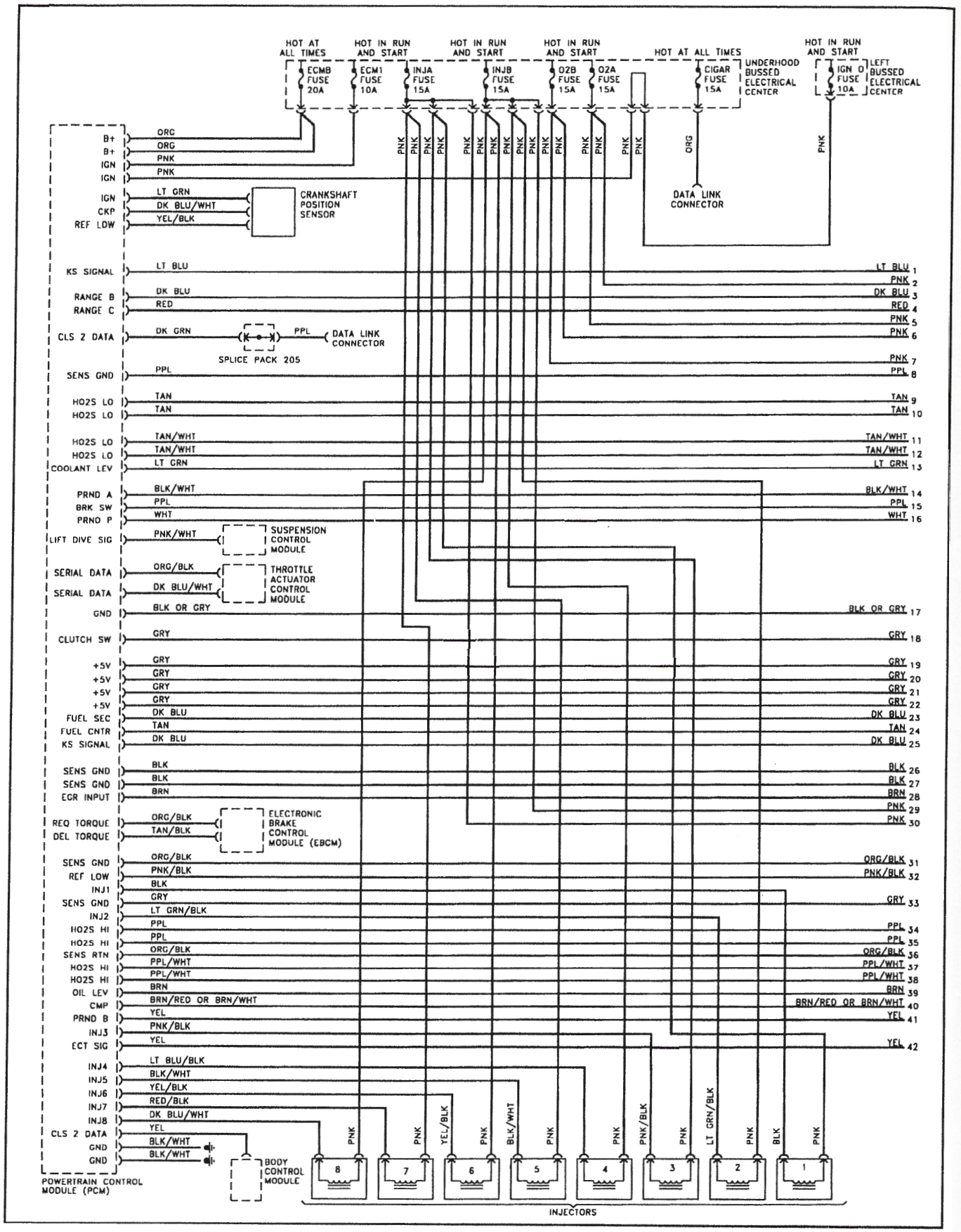

Engine control system – typical V8 (part 1 of 4)

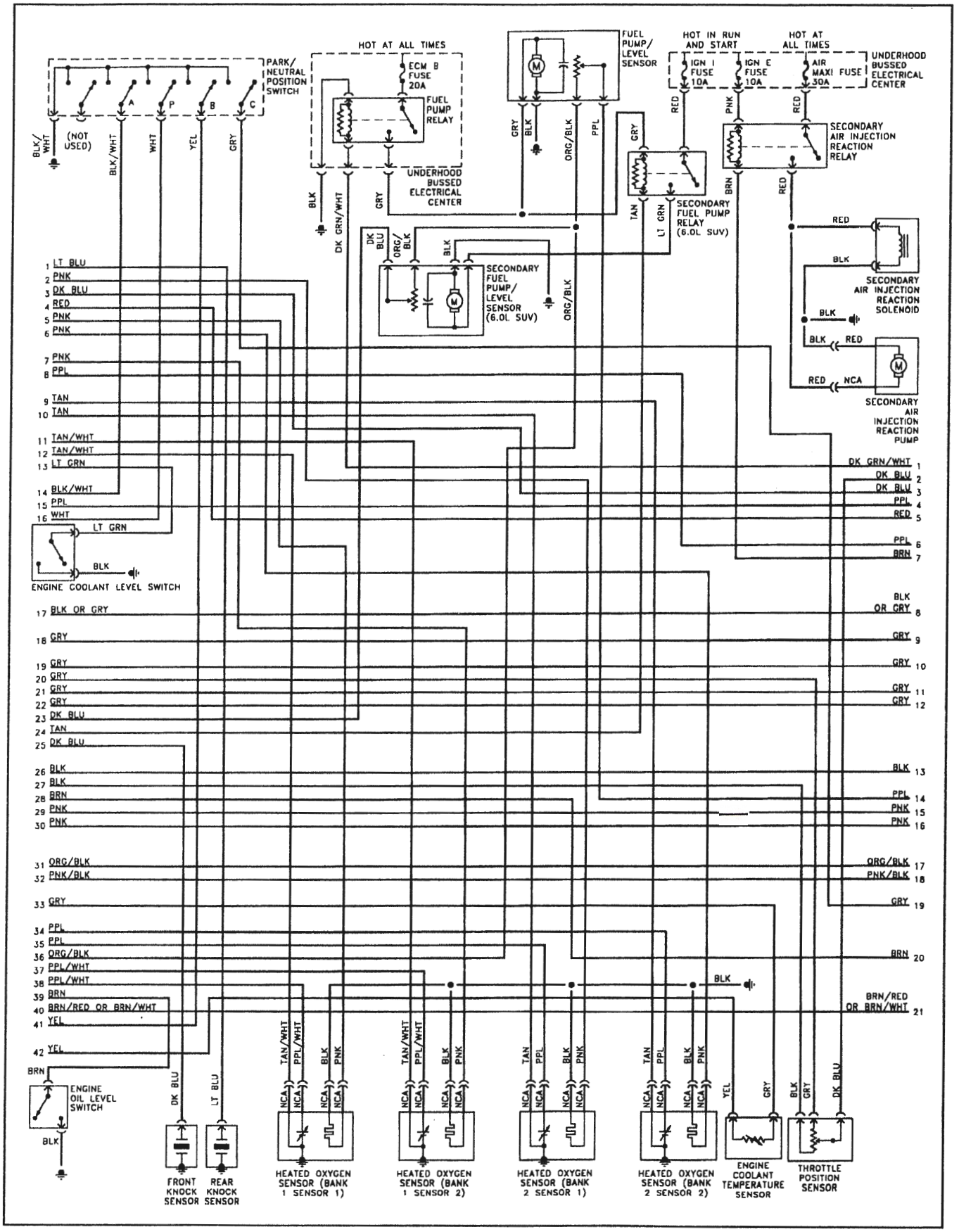

Engine control system – typical V8 (part 2 of 4, without Electronic Throttle Control)

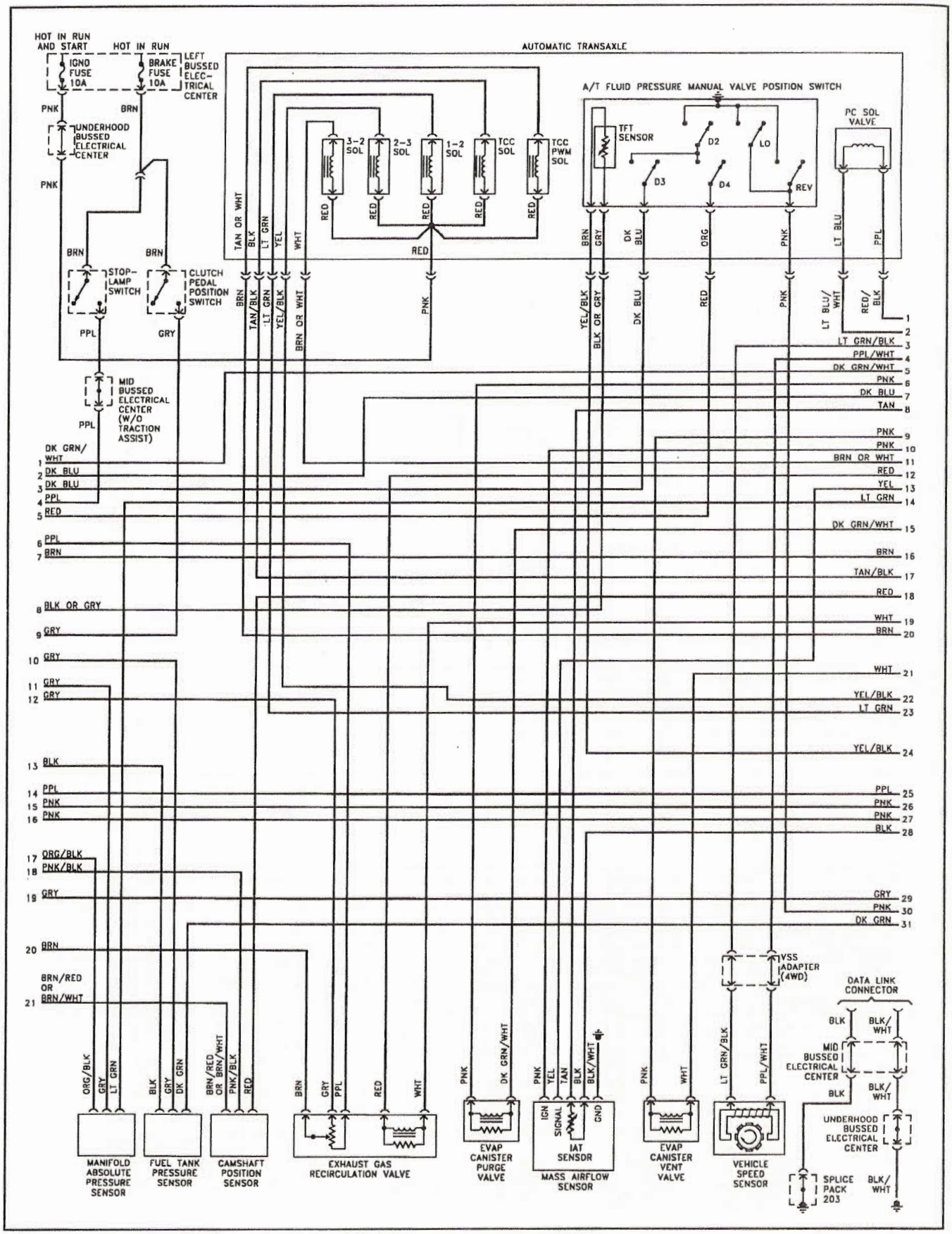

Engine control system – typical V8 (part 3 of 4)

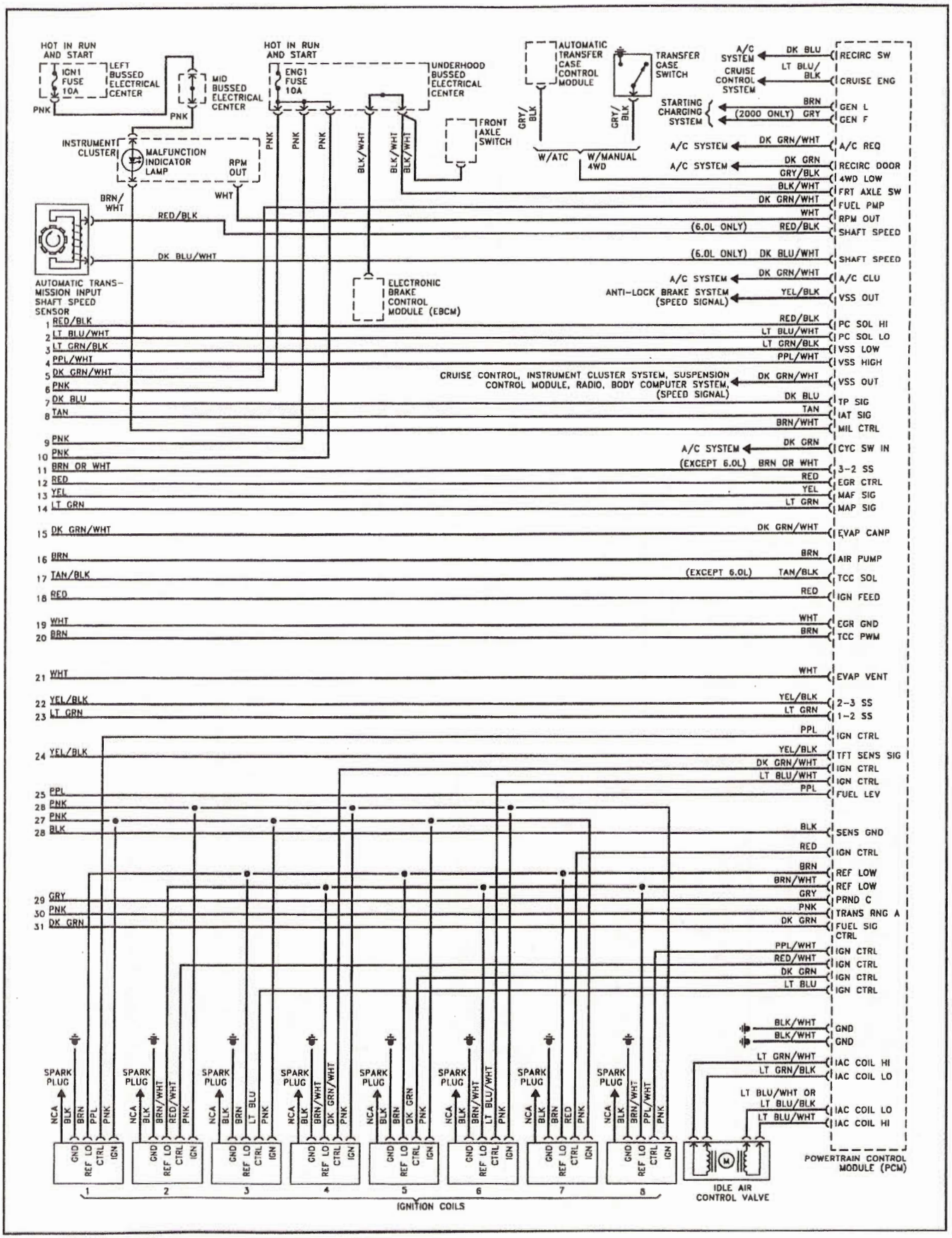

Engine control system – typical V8 (part 4 of 4)

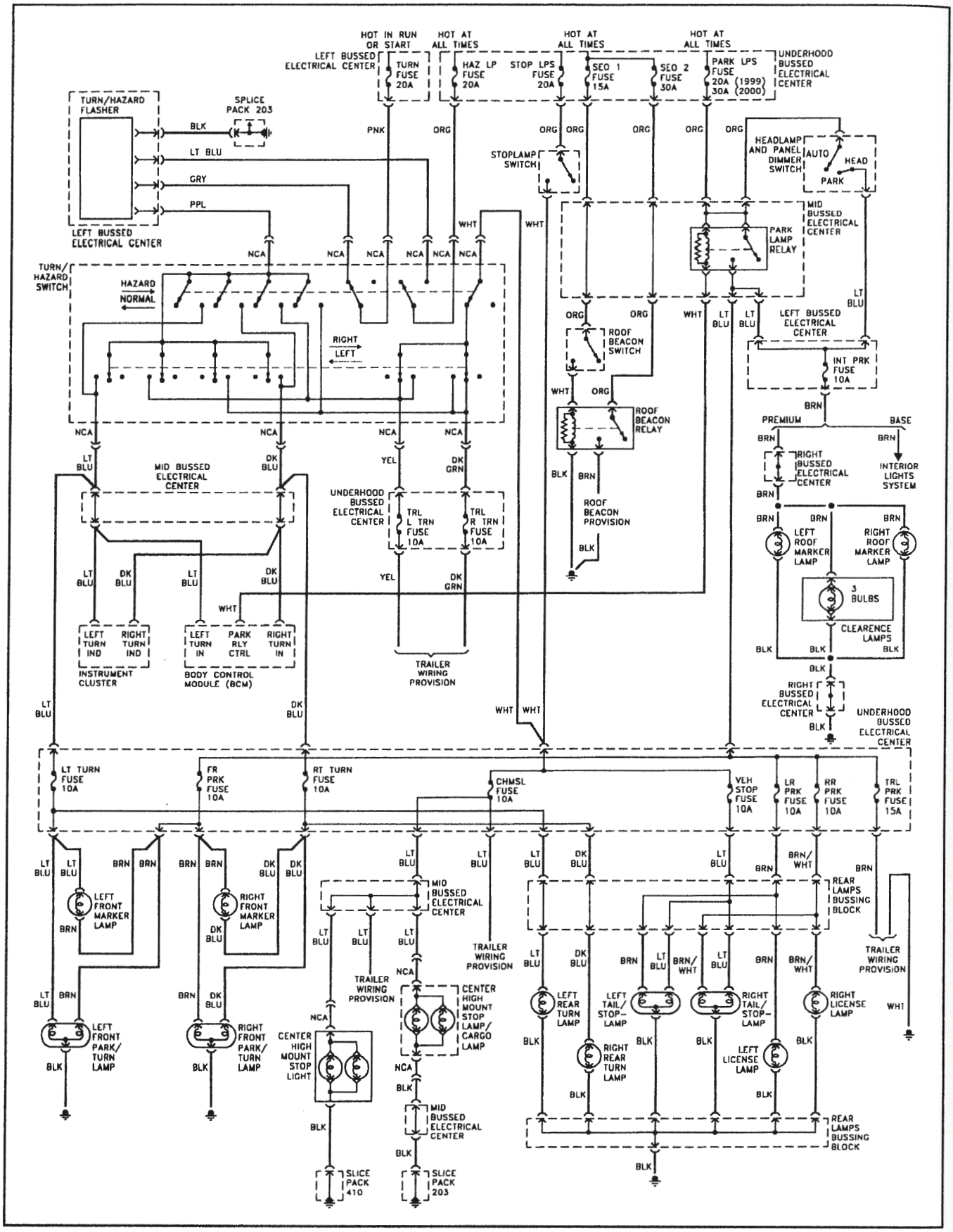

Exterior lighting system – typical pickup models (part 1 of 2)

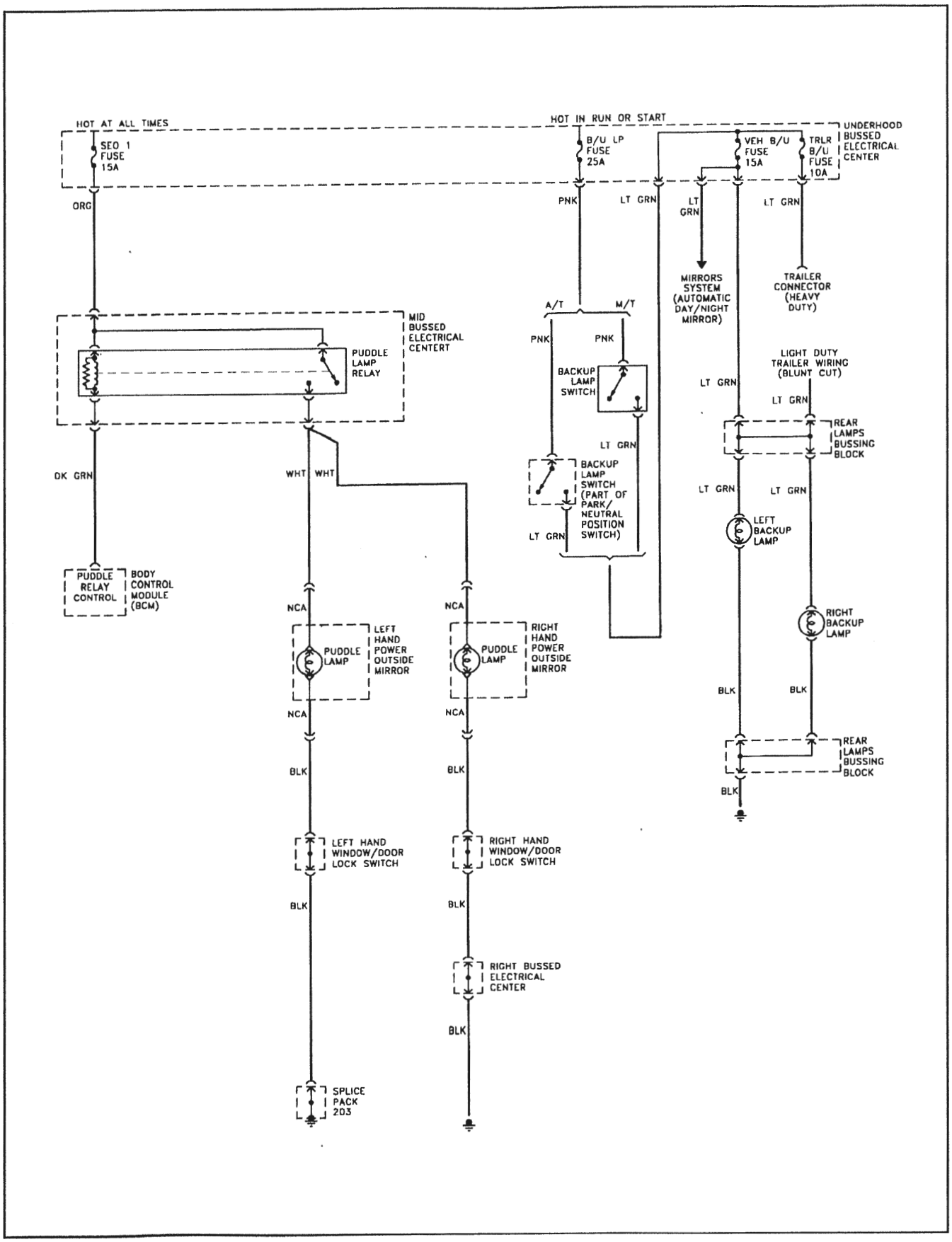

Exterior lighting system – typical pickup models (part 2 of 2)

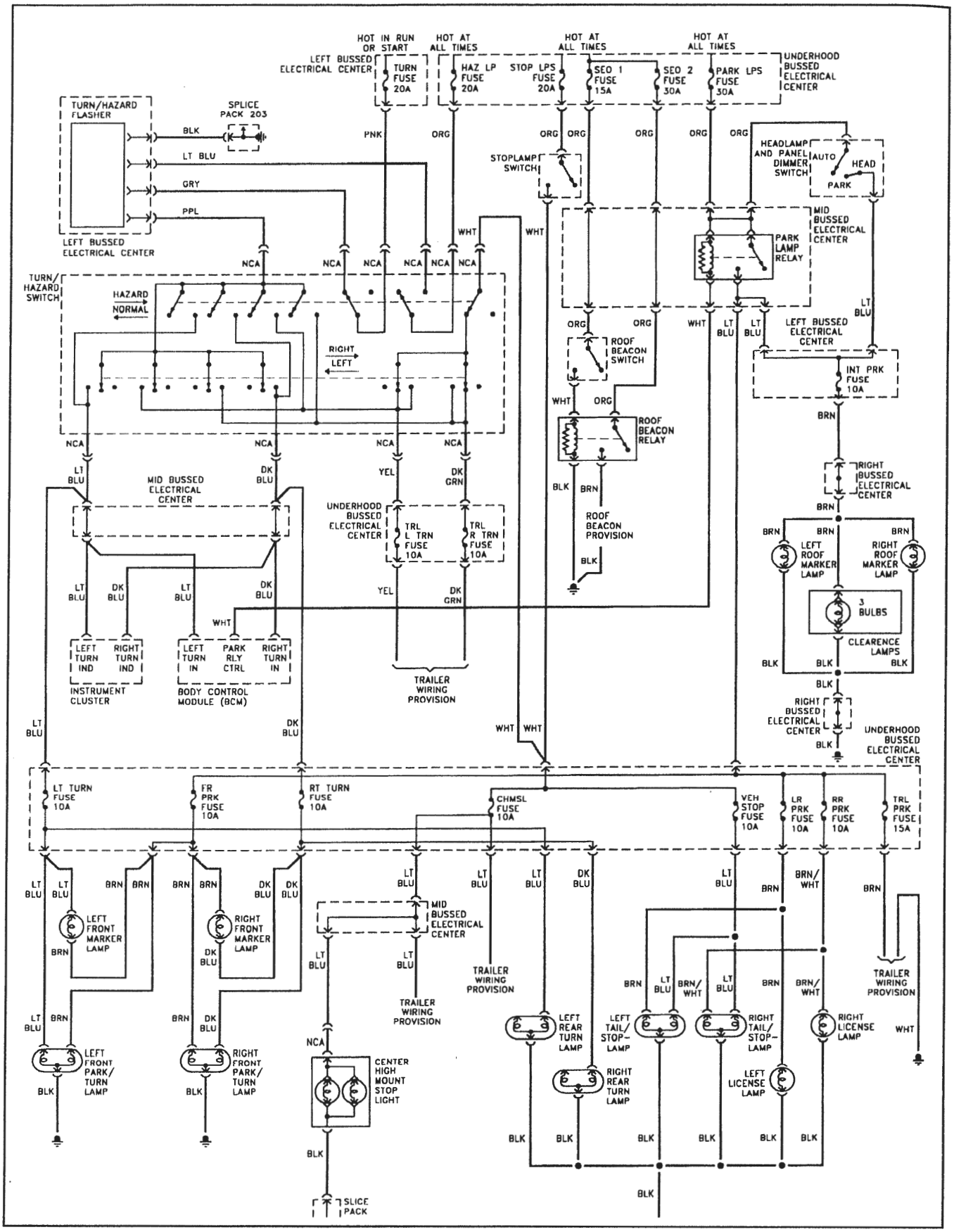

Exterior lighting system – typical SUV models (part 1 of 2)

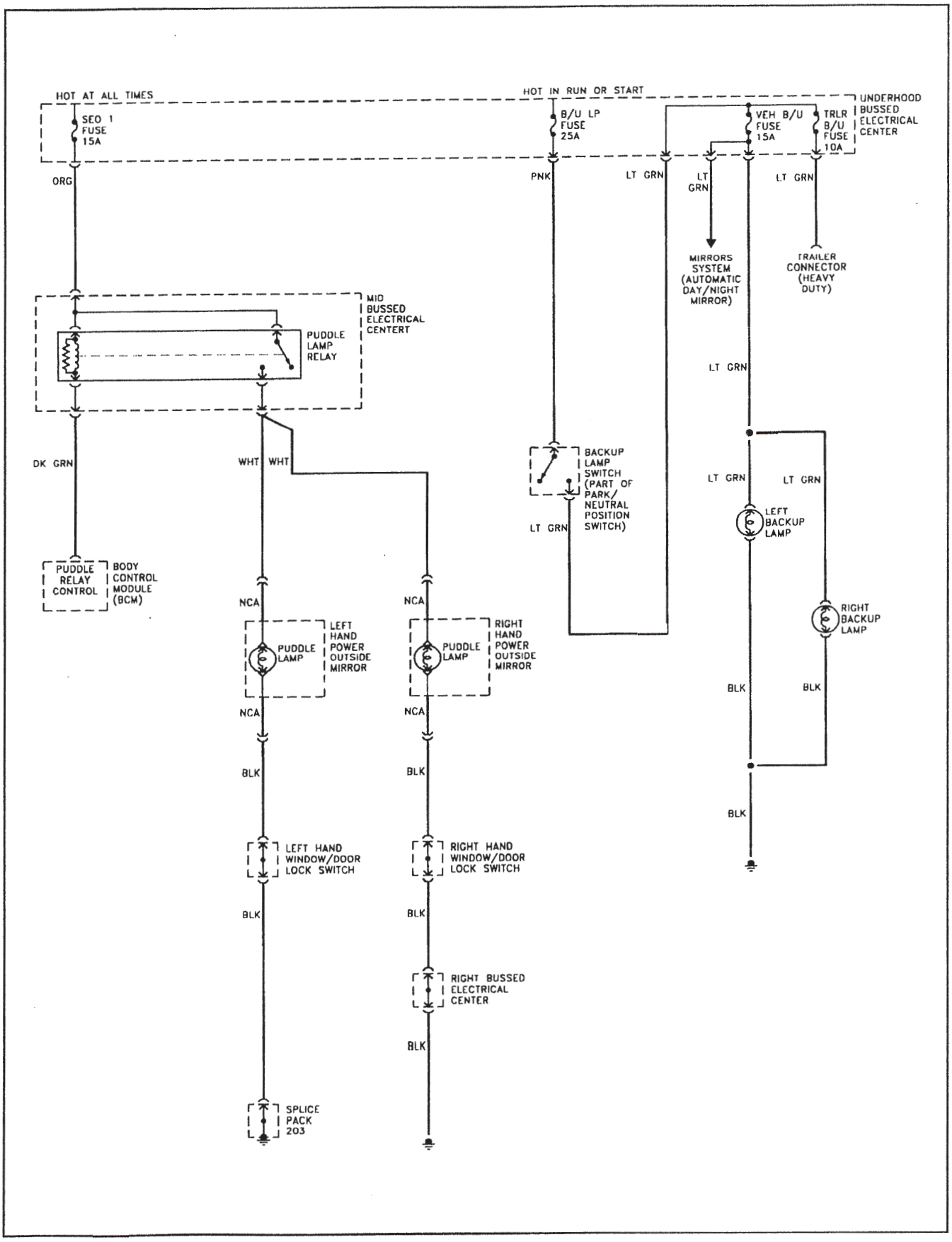

Exterior lighting system – typical SUV models (part 2 of 2)

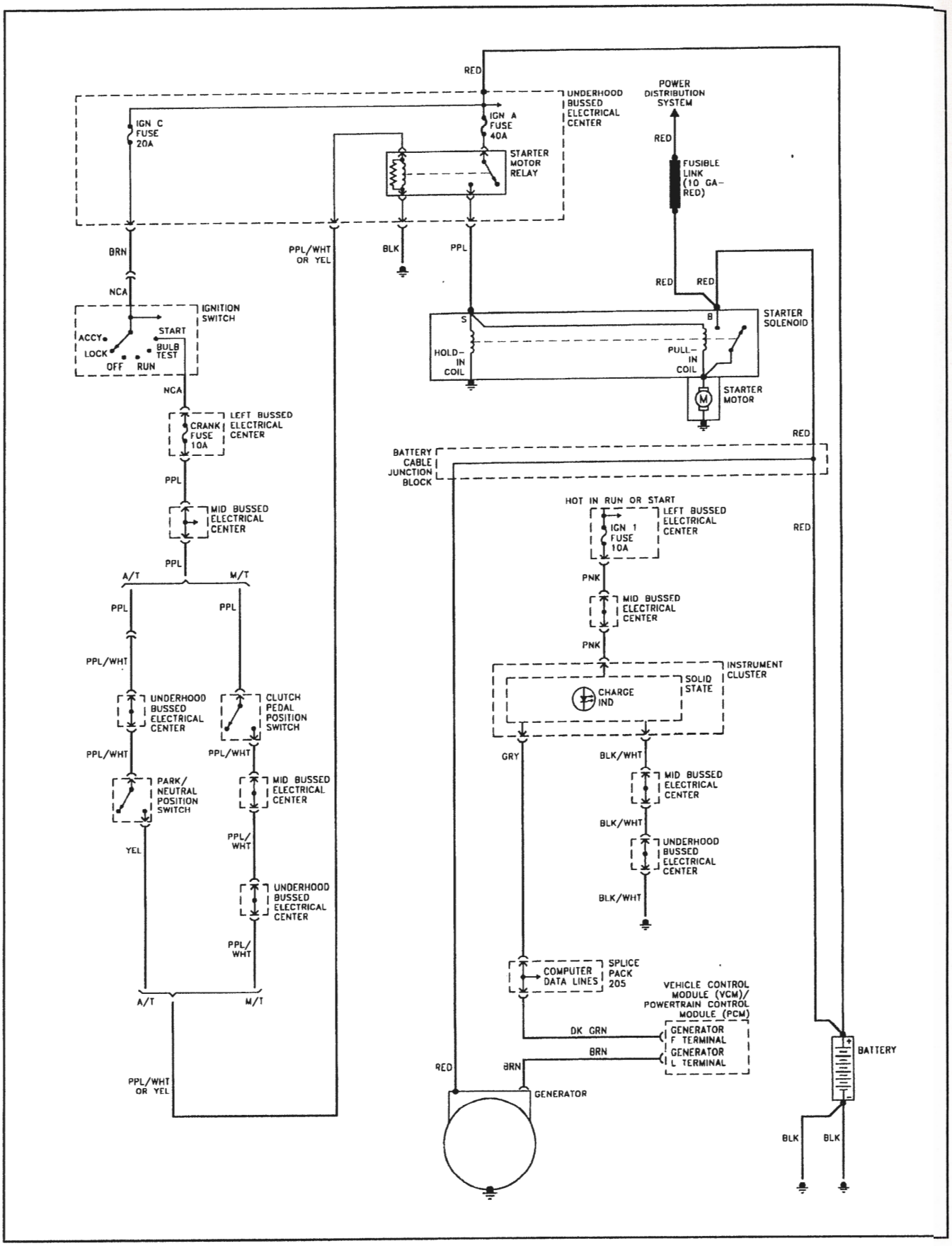

Starting and charging systems – typical

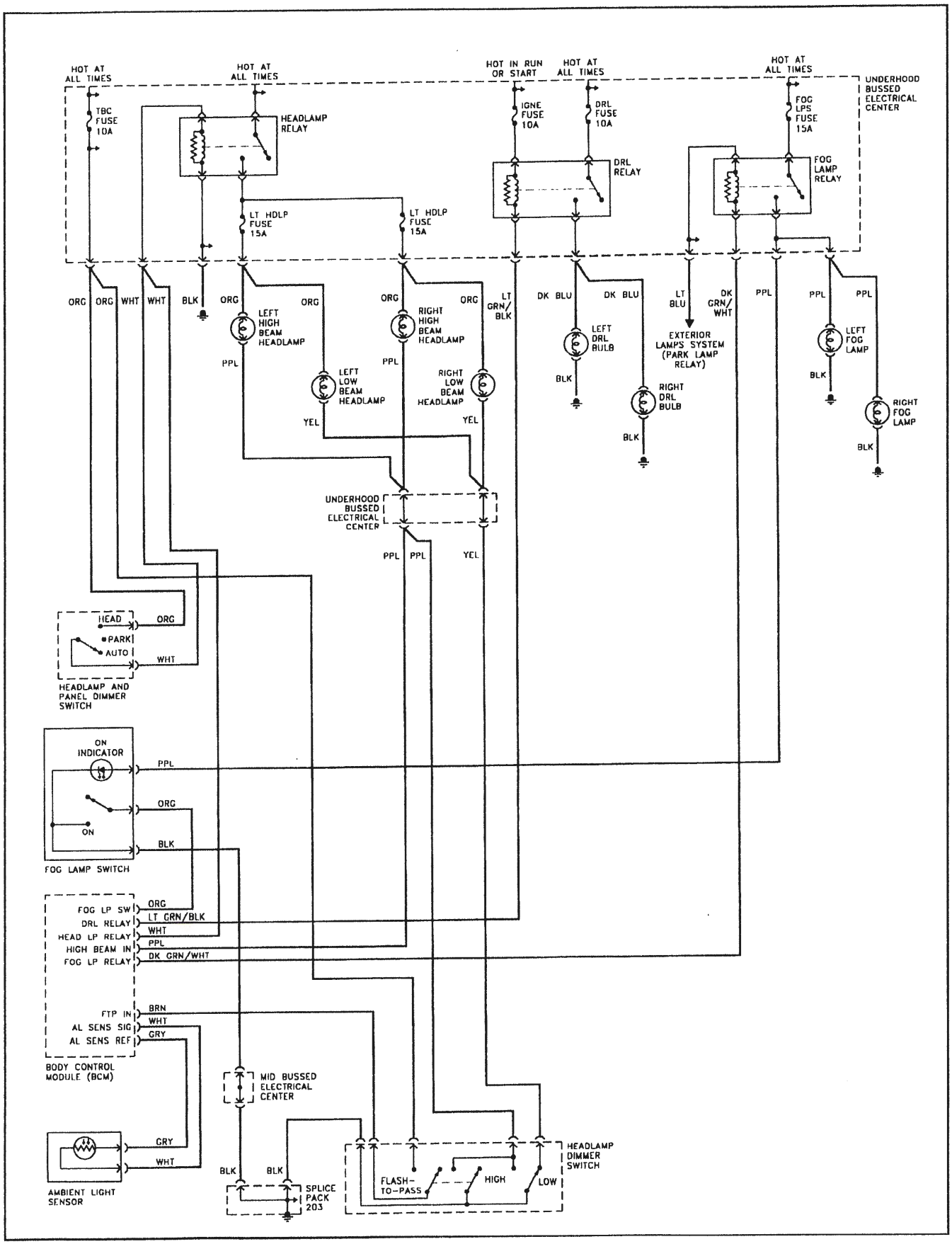

Headlight system – typical

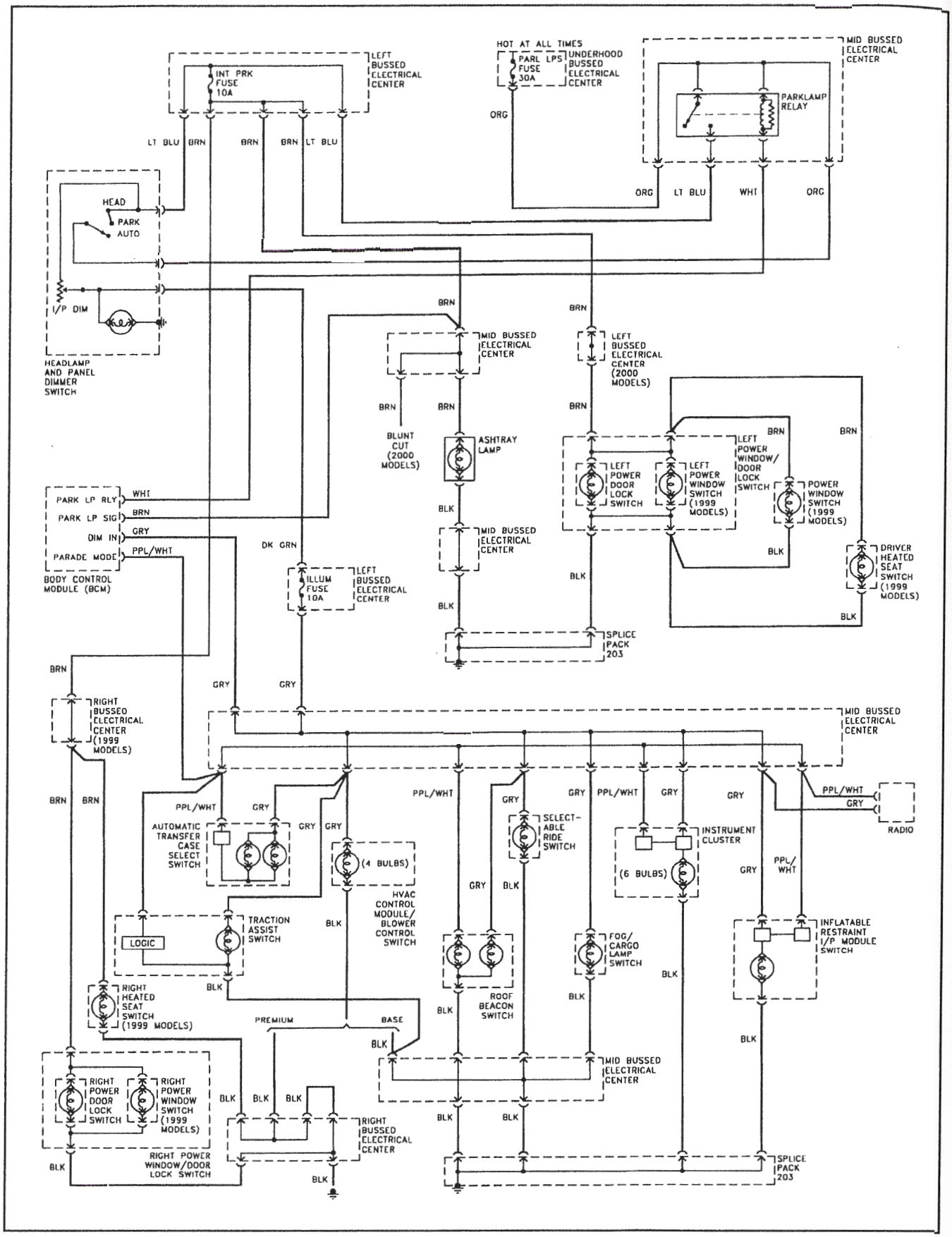

Interior lighting system – typical pickup models

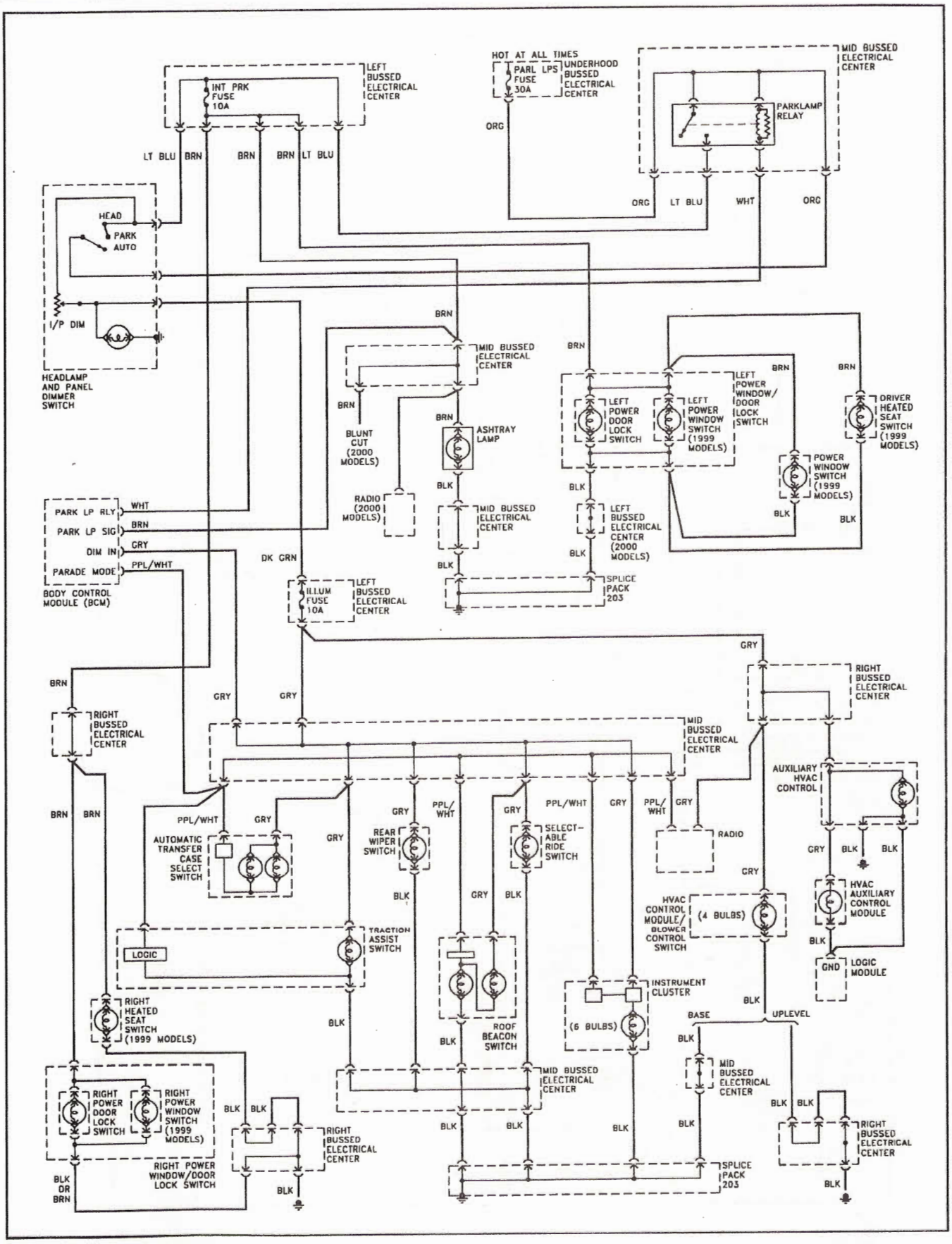

Interior lighting system – typical SUV models

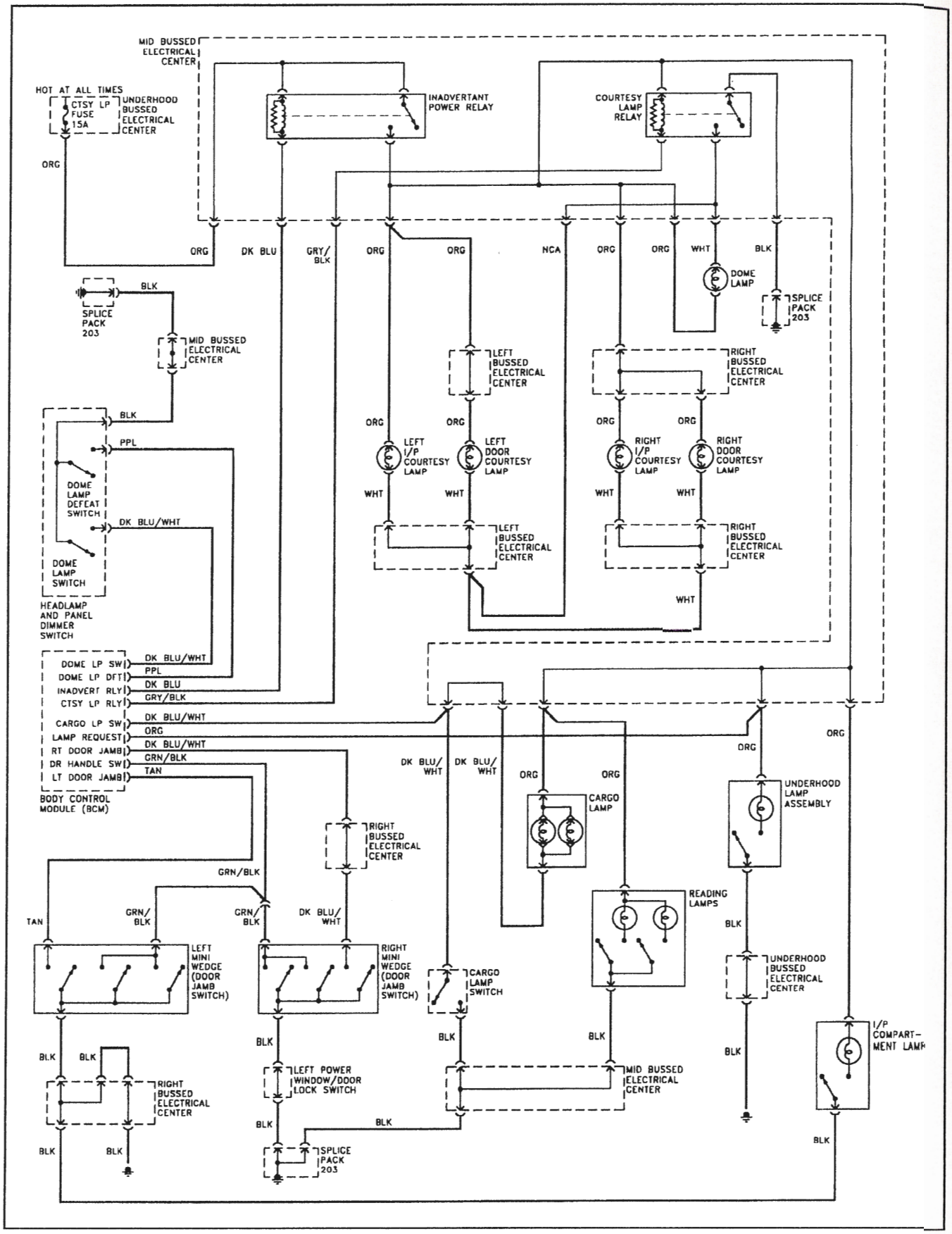

Courtesy lighting system – typical 1999 models

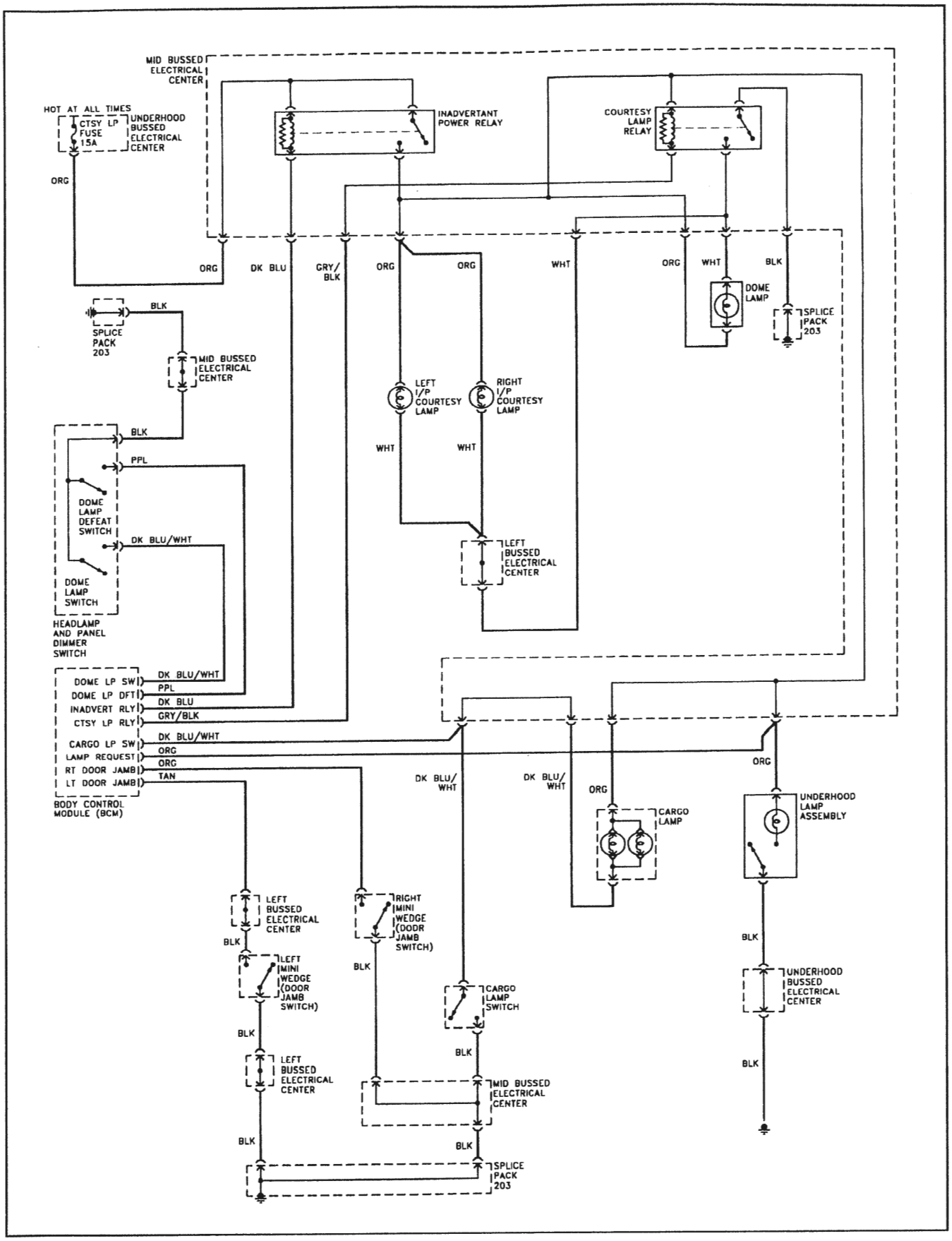

Courtesy lighting system – typical 2000 and later pickup models

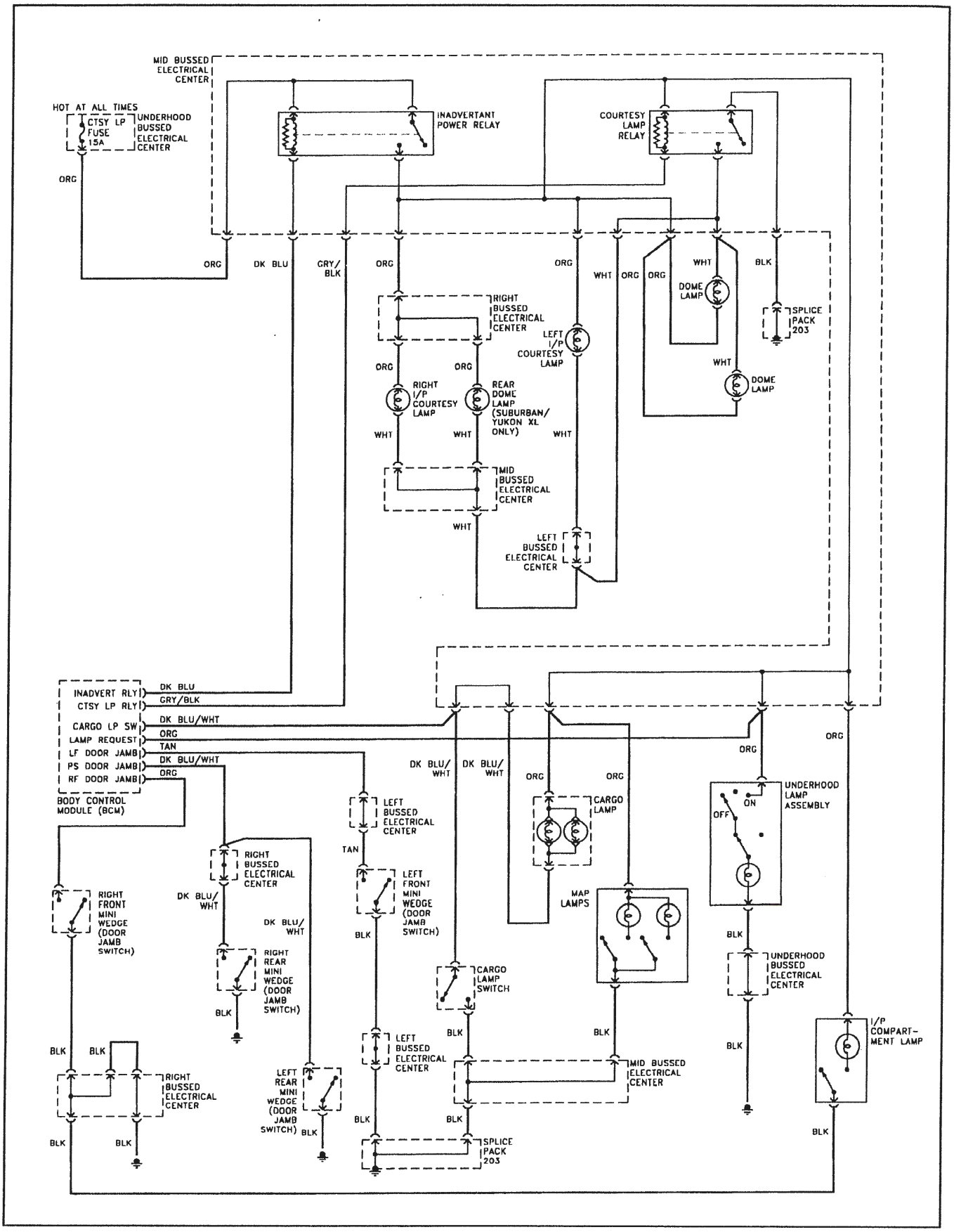

Courtesy lighting system – typical 2000 and later SUV models

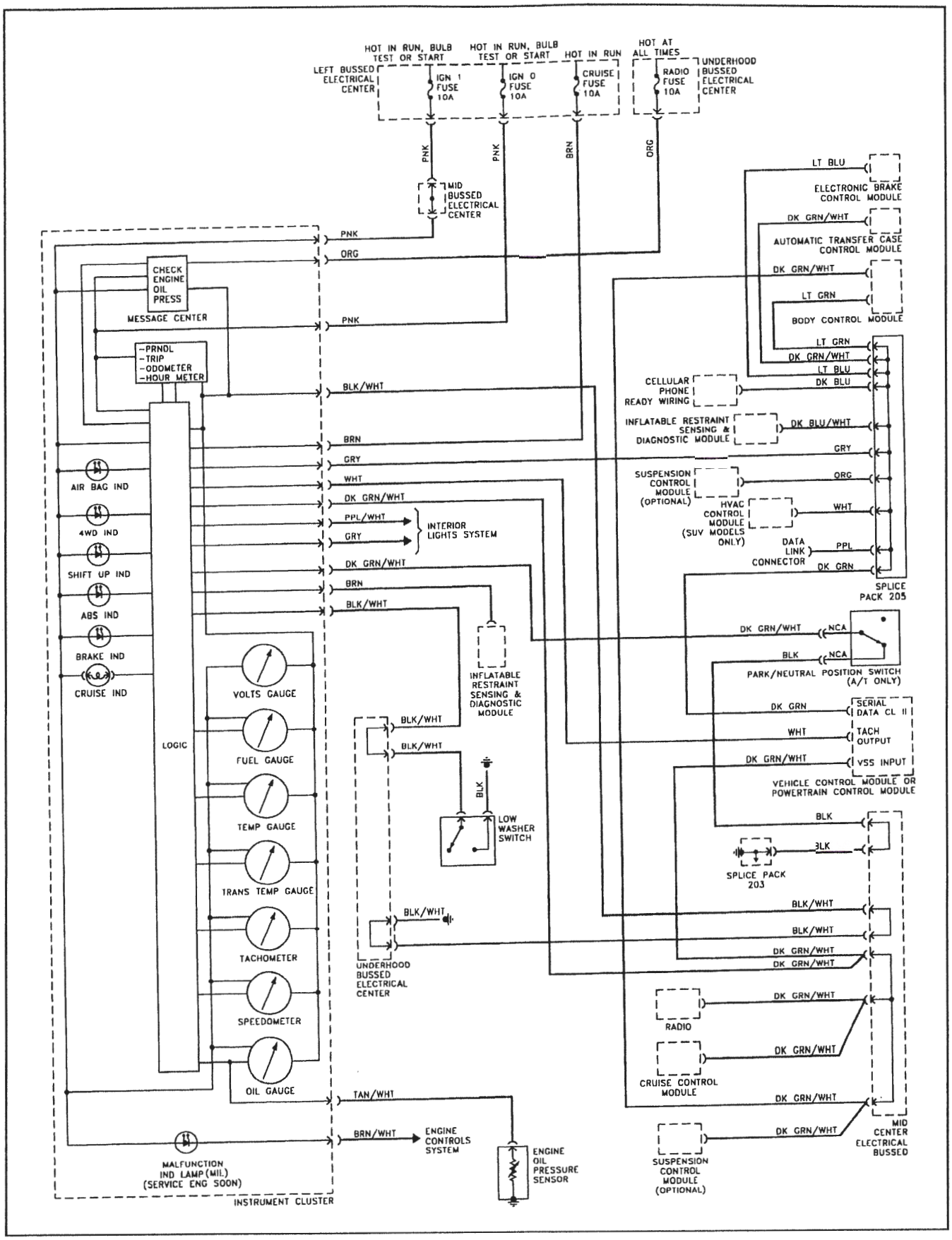

Warning lighting system – typical (without side-impact airbags)

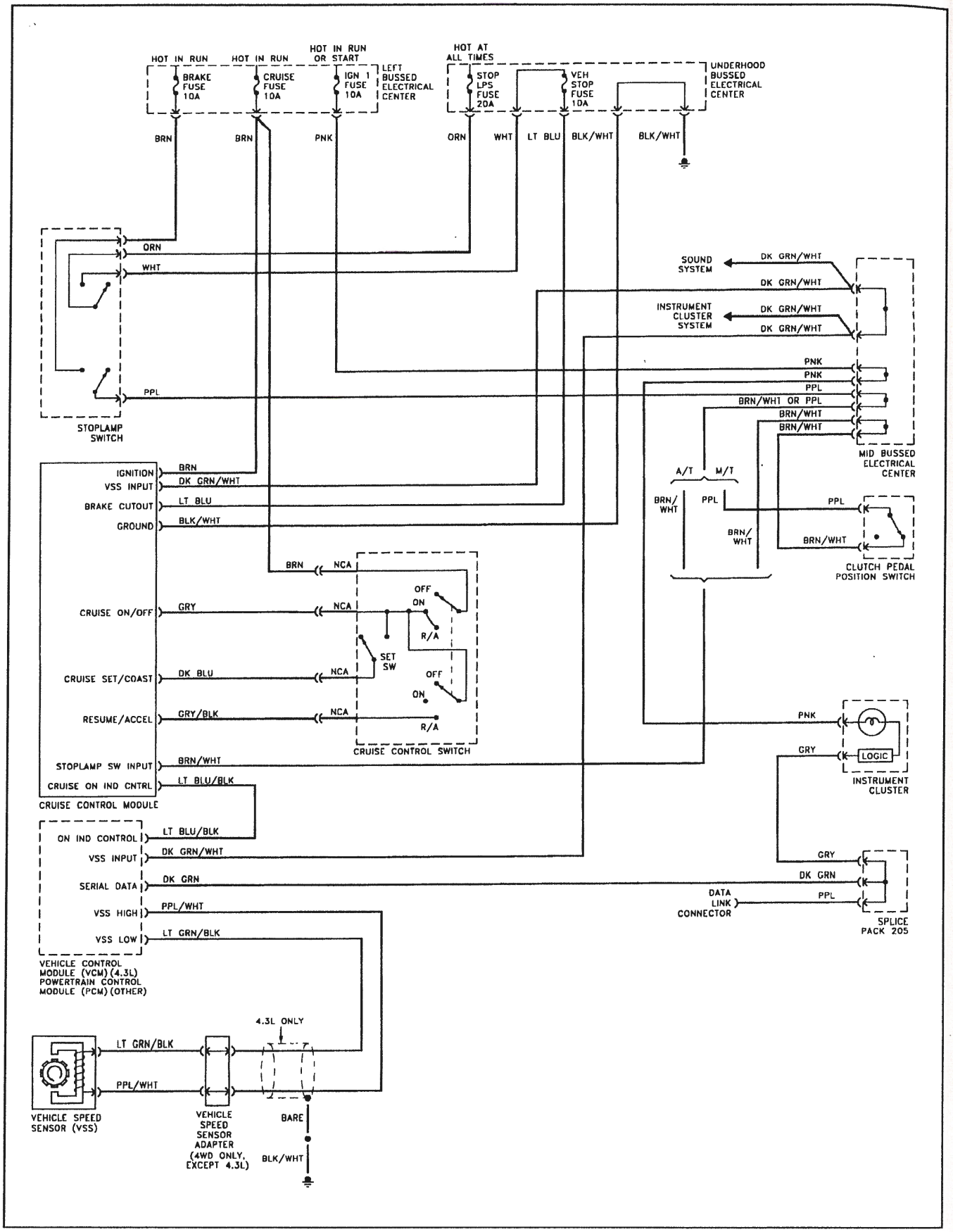

Cruise control system – typical

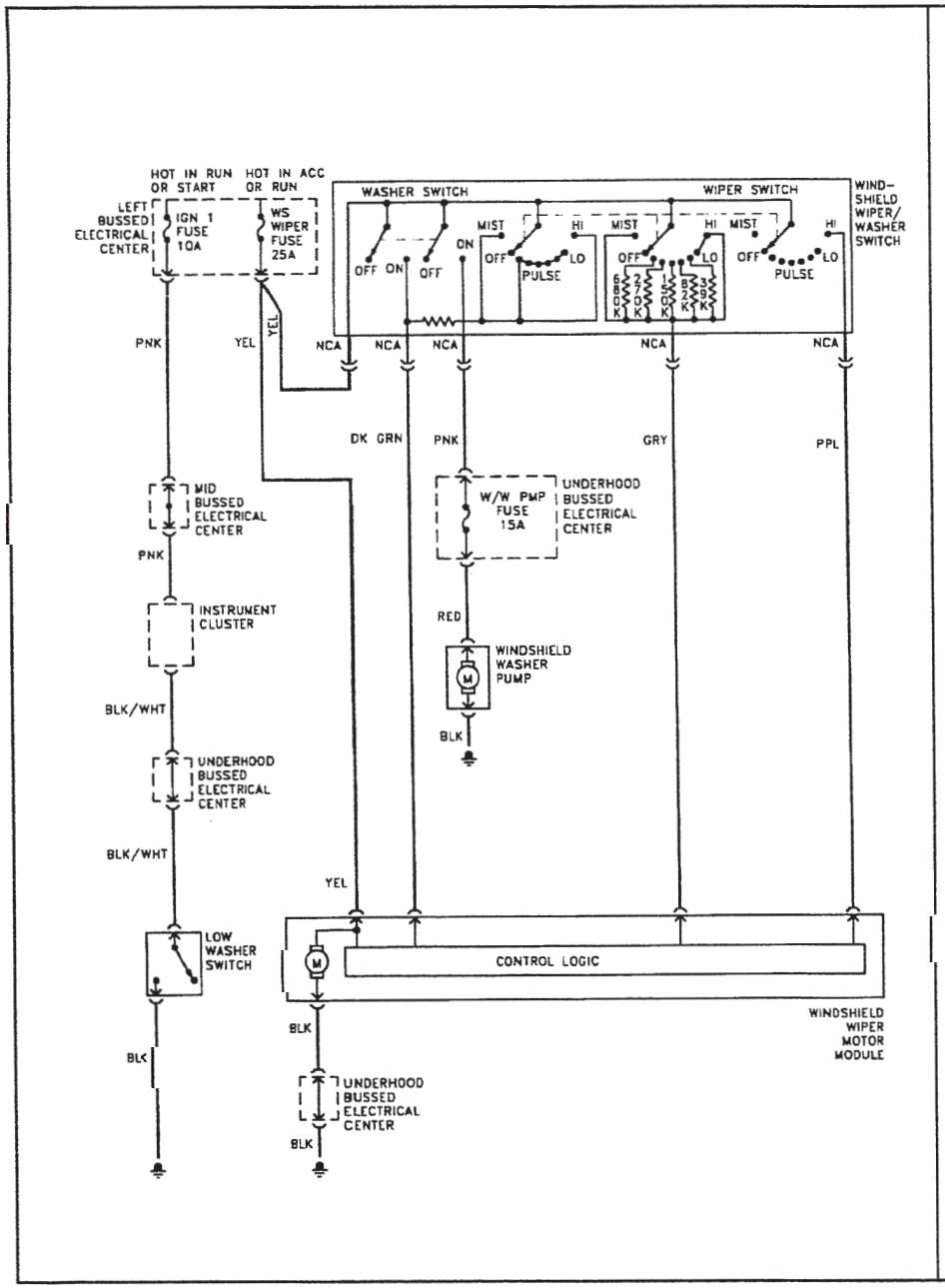

Wiper/washer system – typical front, all models

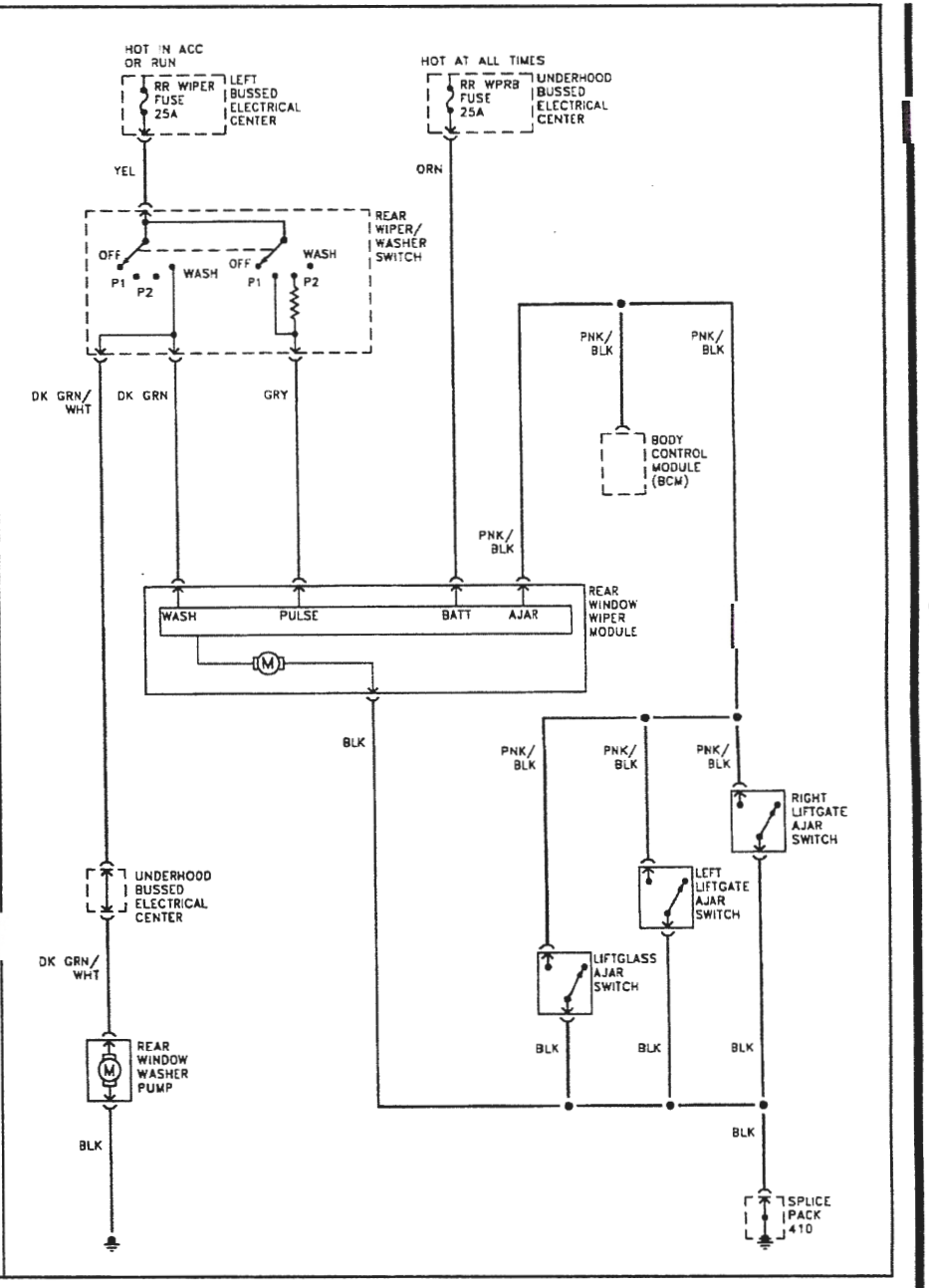

Wiper/washer system – typical rear, 2000 and later SUV models

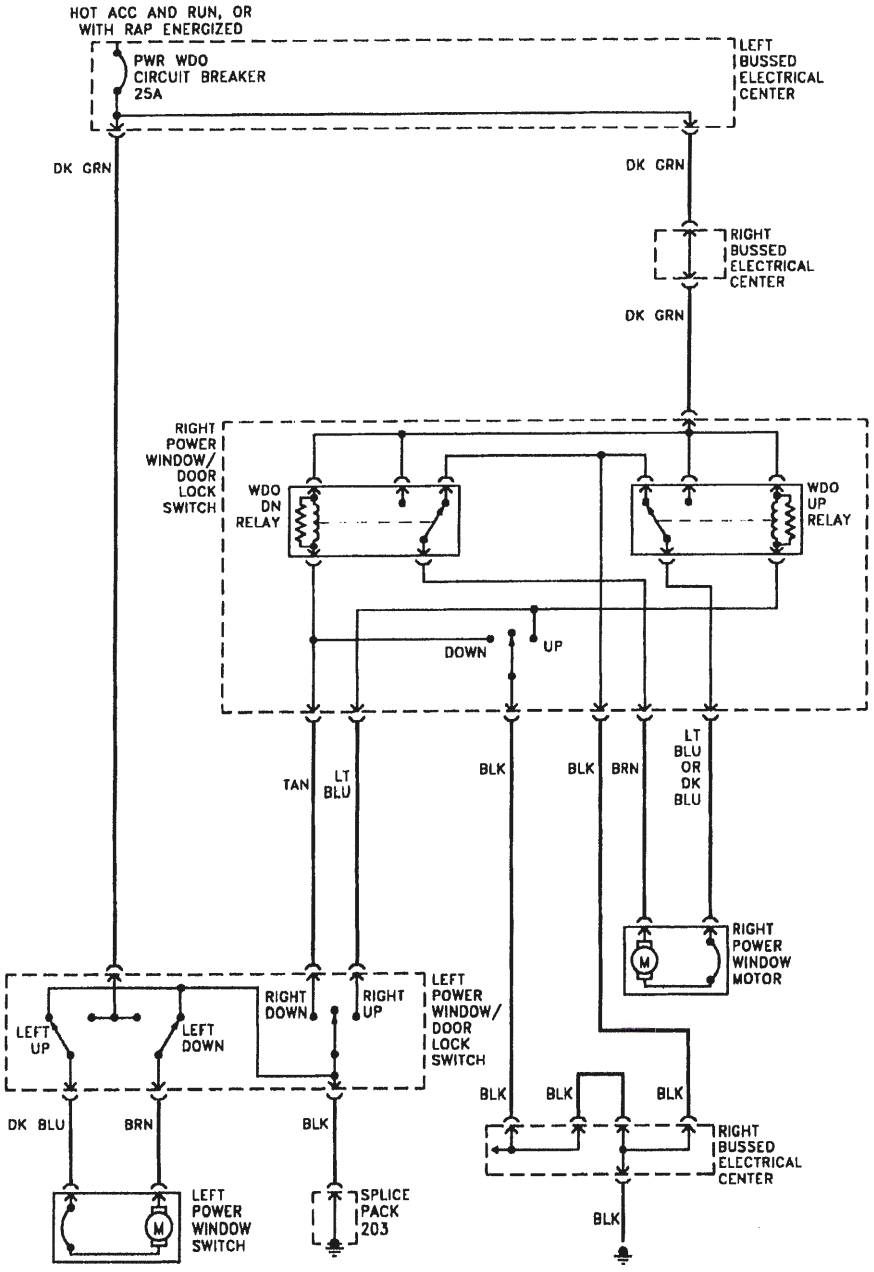

Power window system – typical pickup models

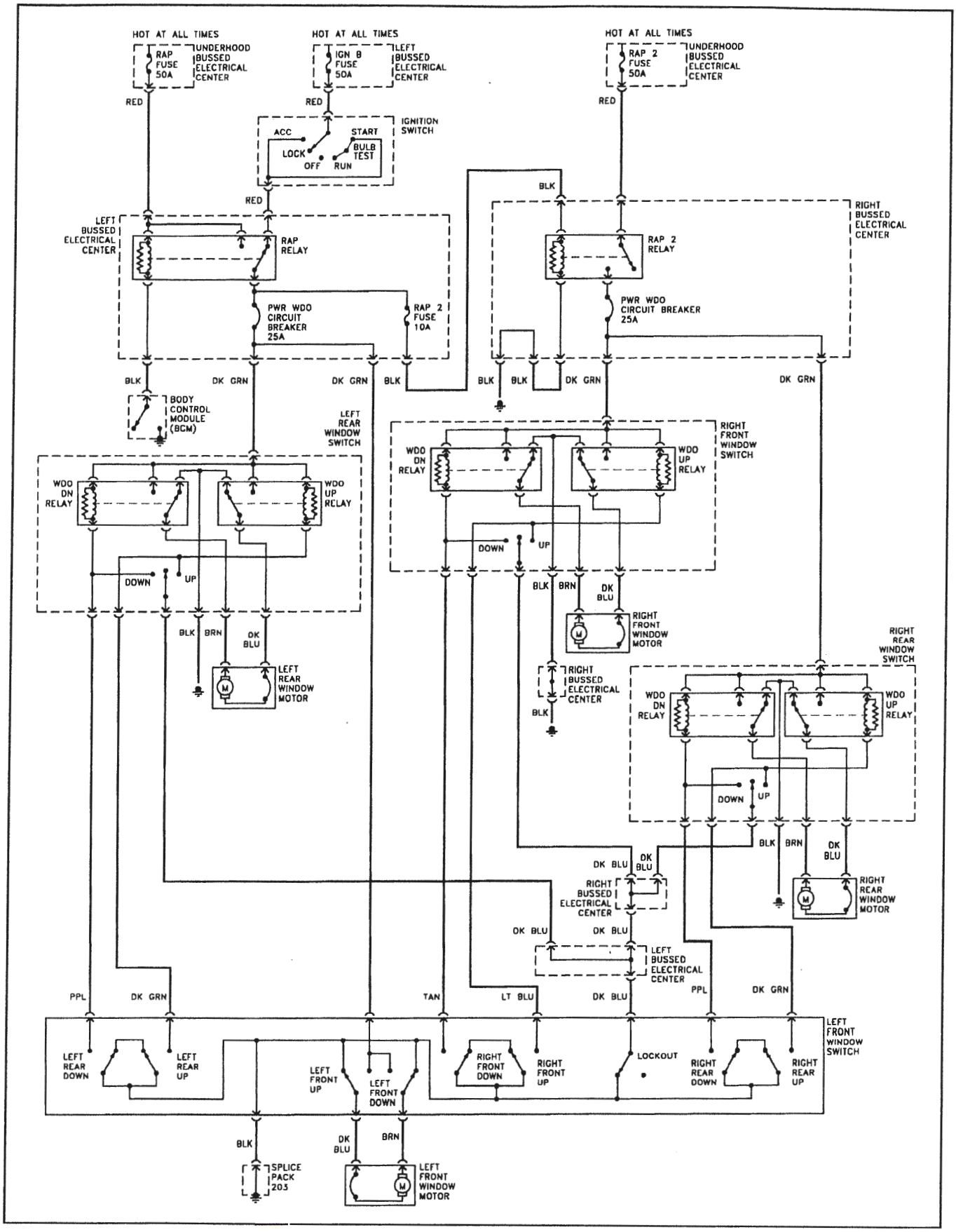

Power window system – typical 2000 and later SUV models

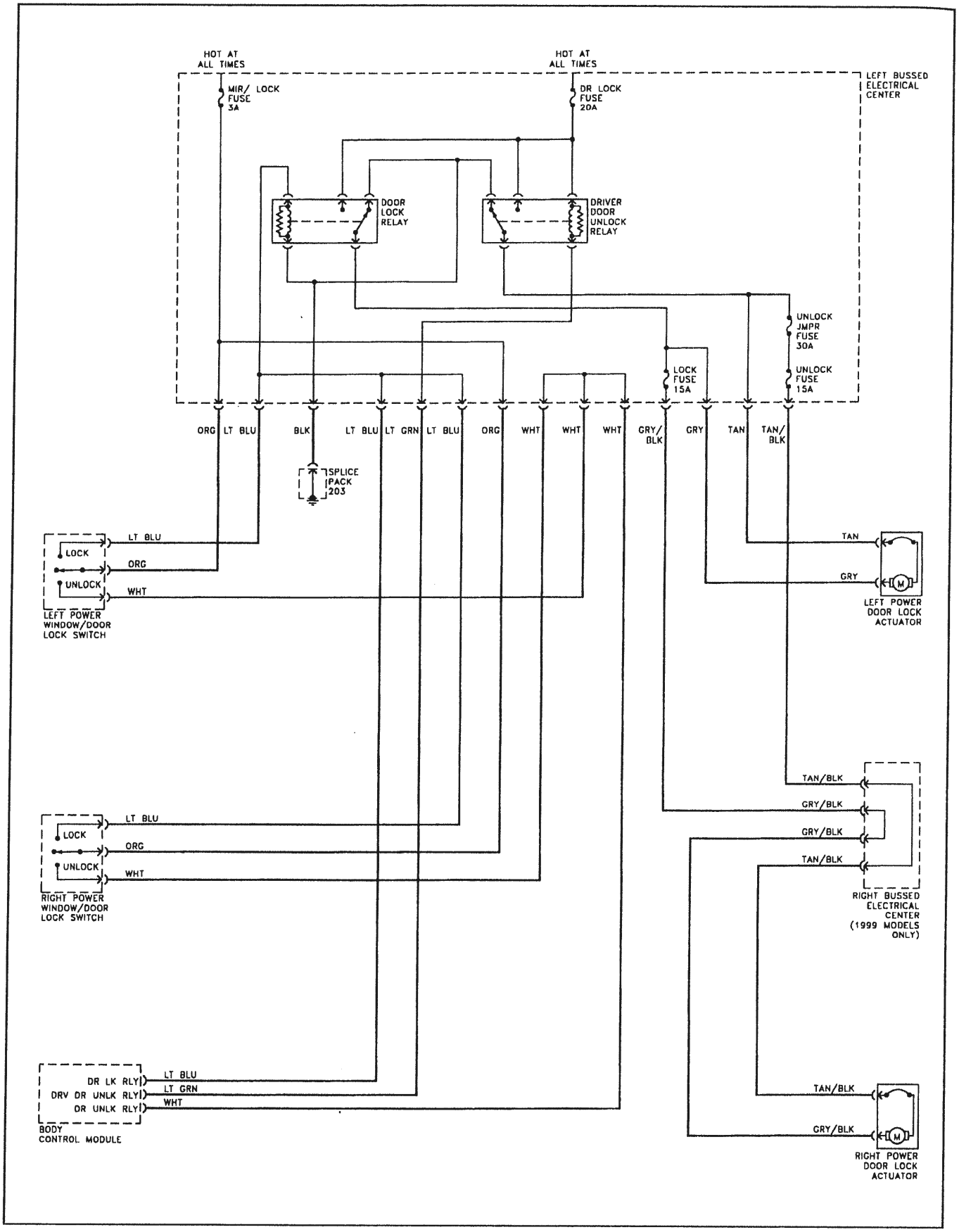

Power door lock system – typical base pickup models

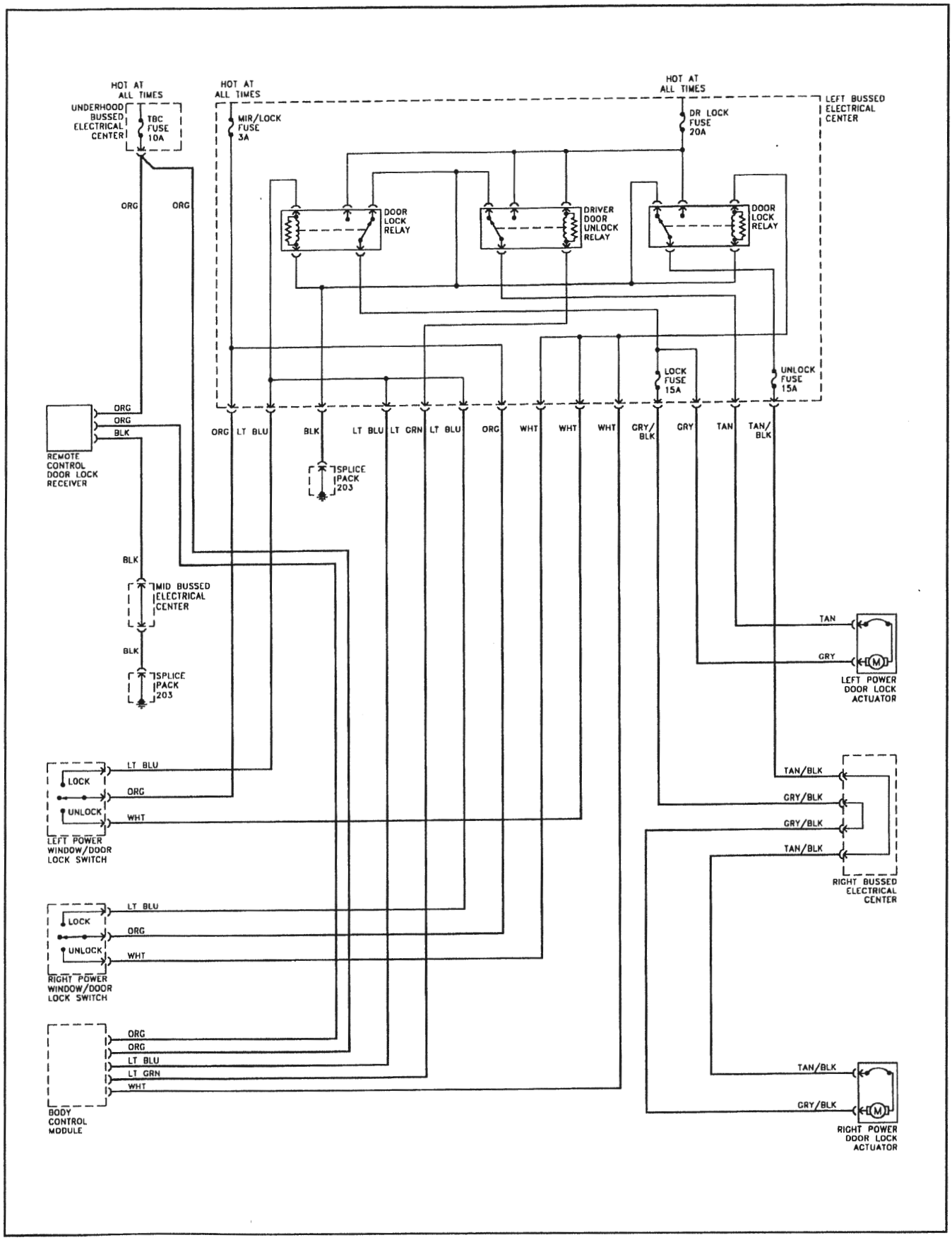

Power door lock system – typical premium pickup models

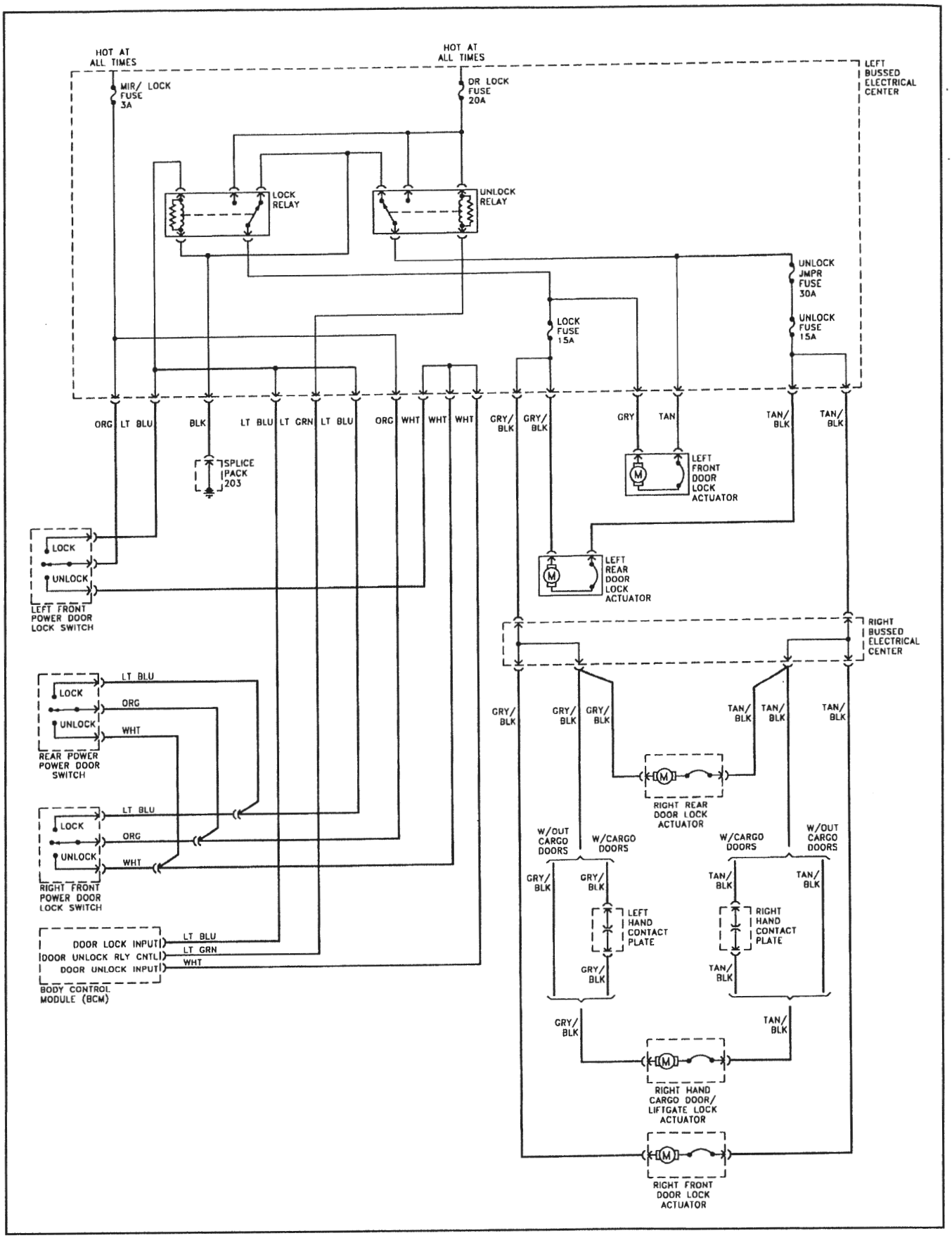

Power door lock system – typical 2000 and later SUV models

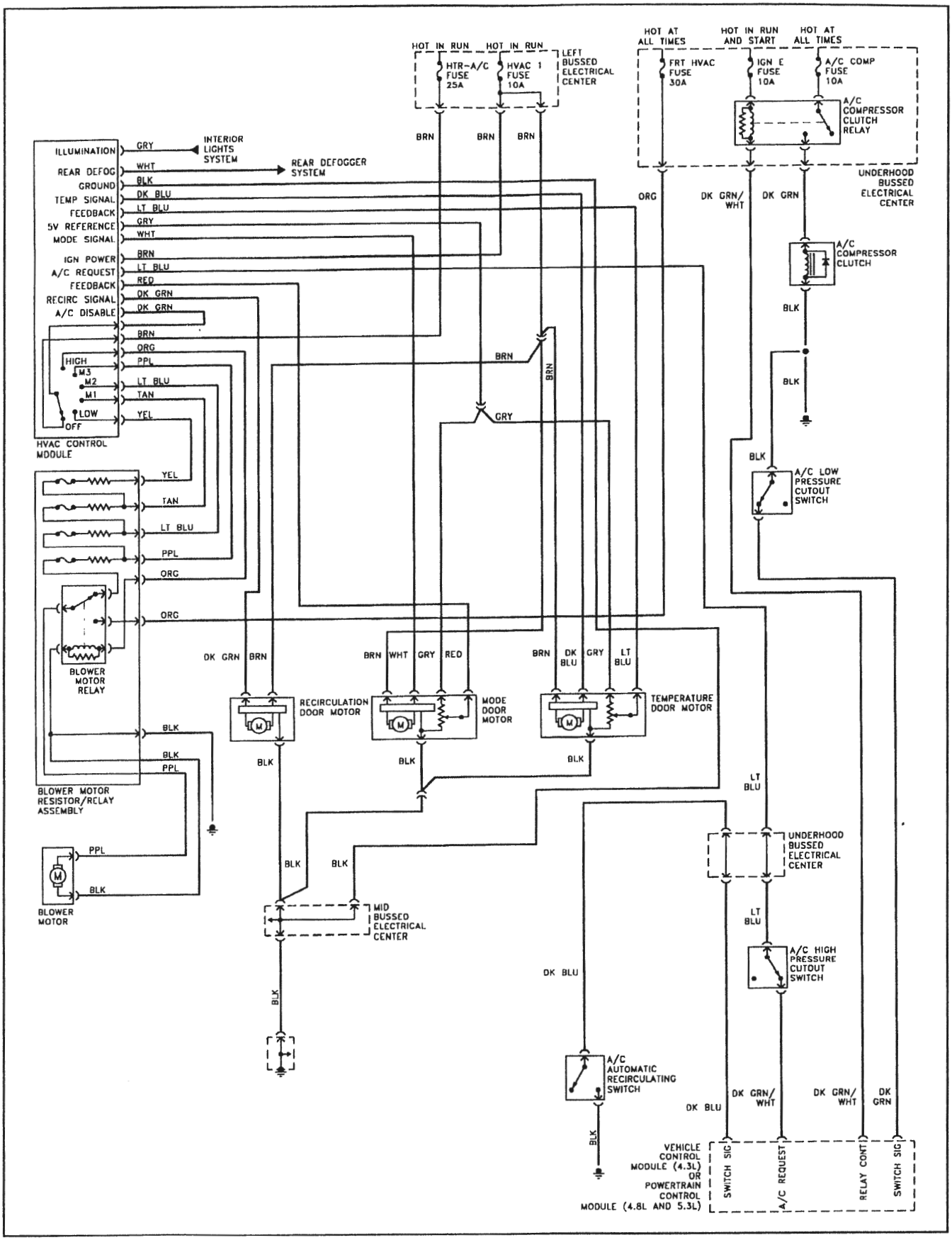

Heating and air-conditioning system – typical 1999 base models

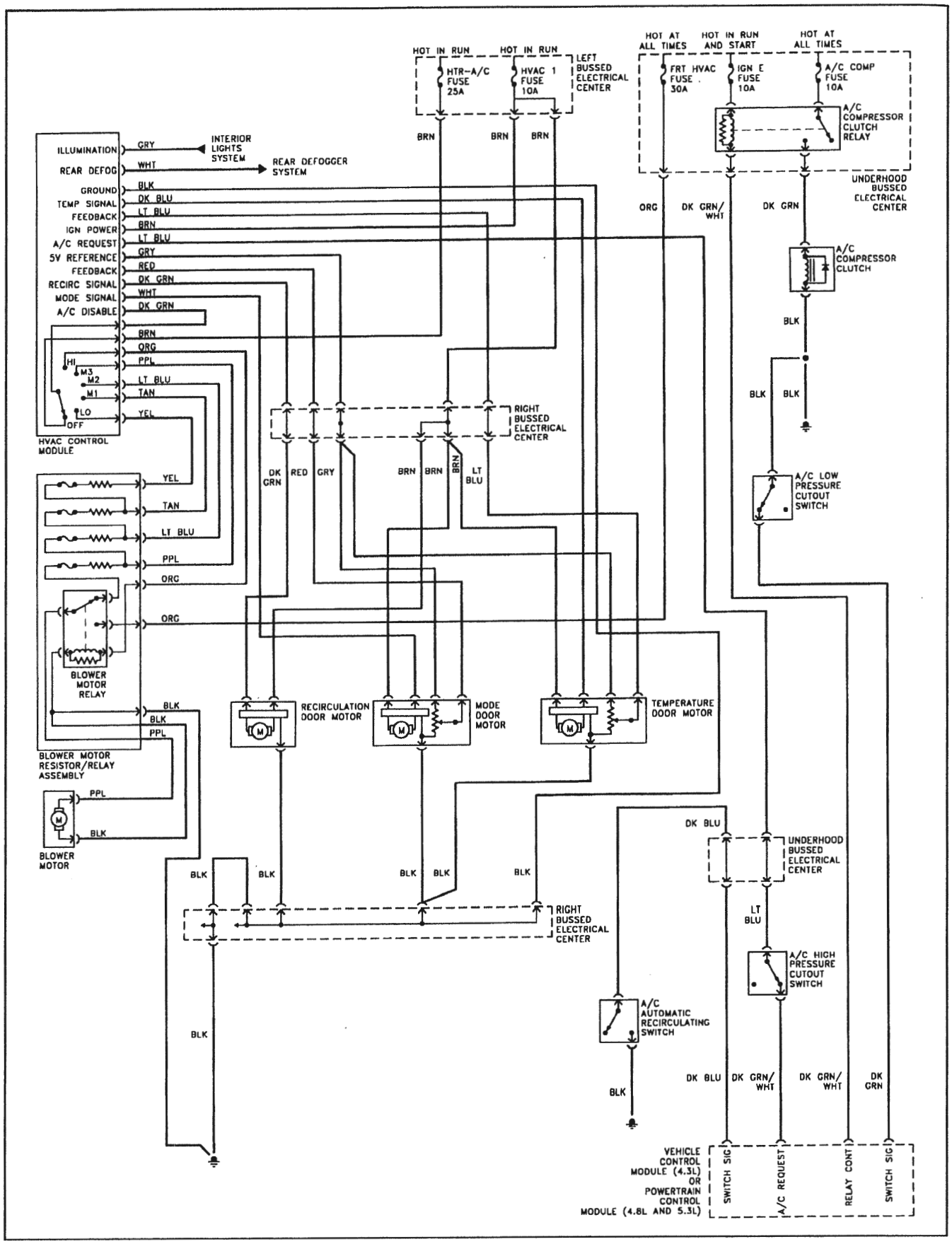

Heating and air-conditioning system – typical 1999 premium models

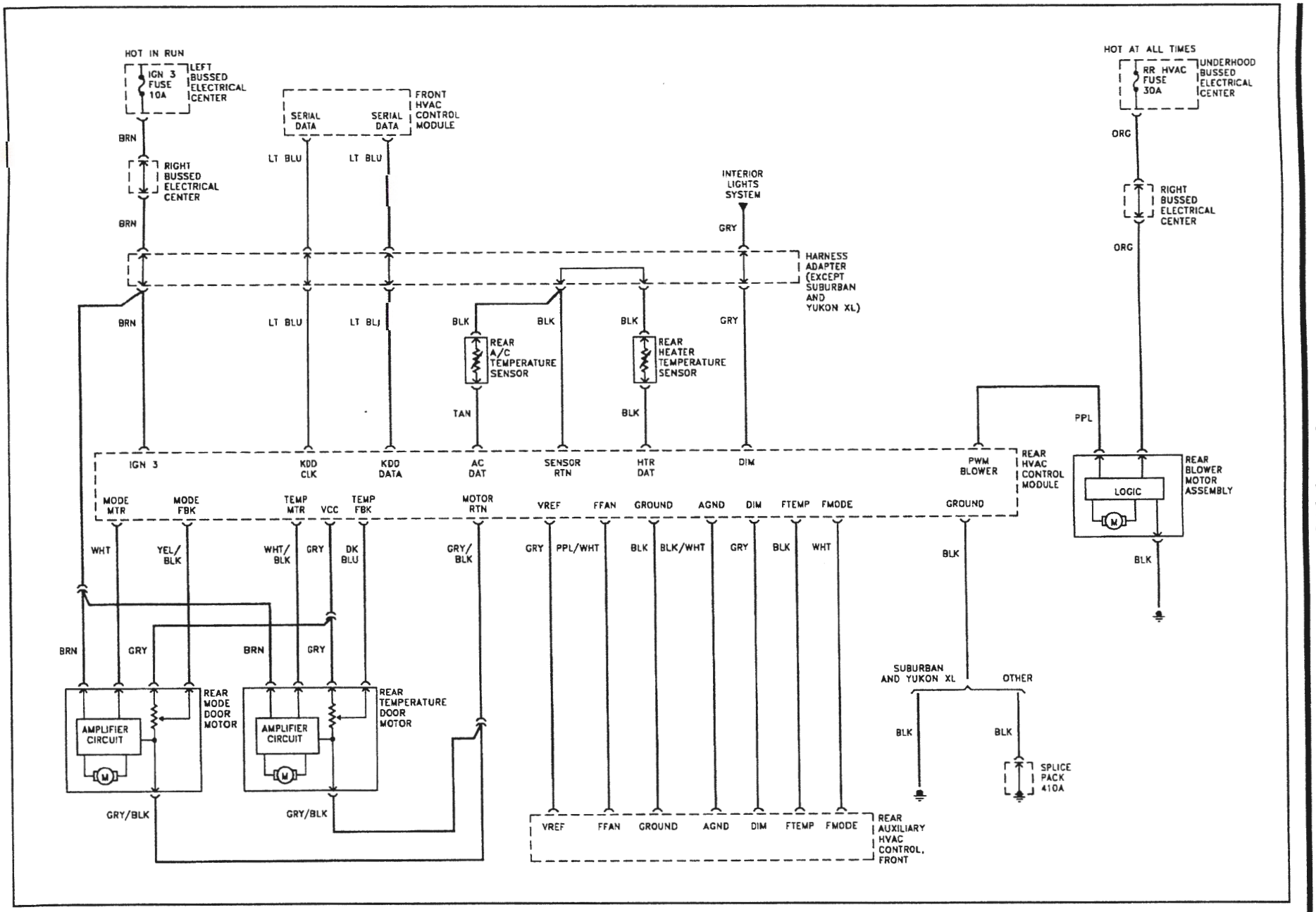

Heating and air-conditioning system – typical rear circuit, 2000 and later SUV models

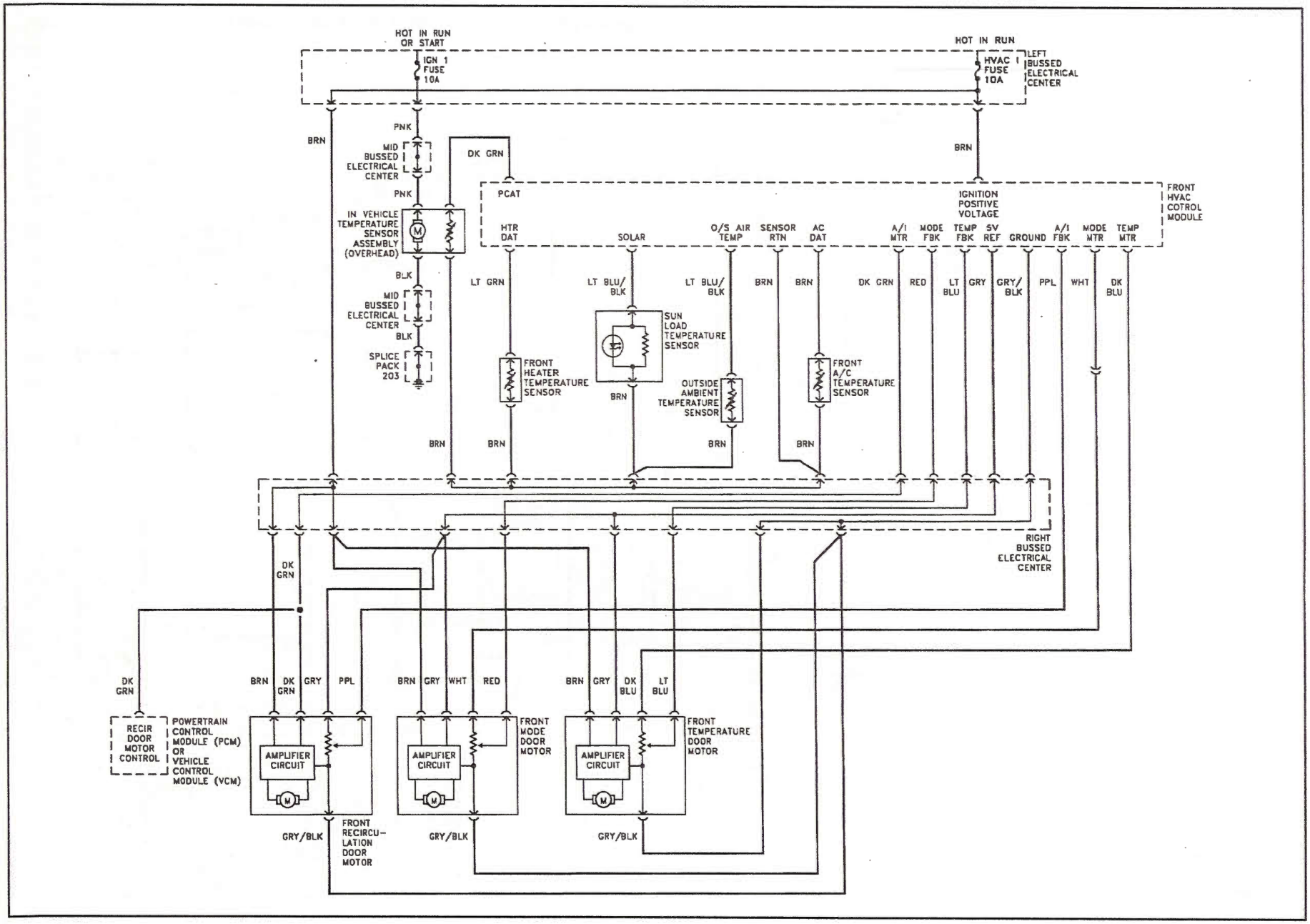

Heating and air-conditioning system – typical 2000 and later front circuit (part 1 of 2)

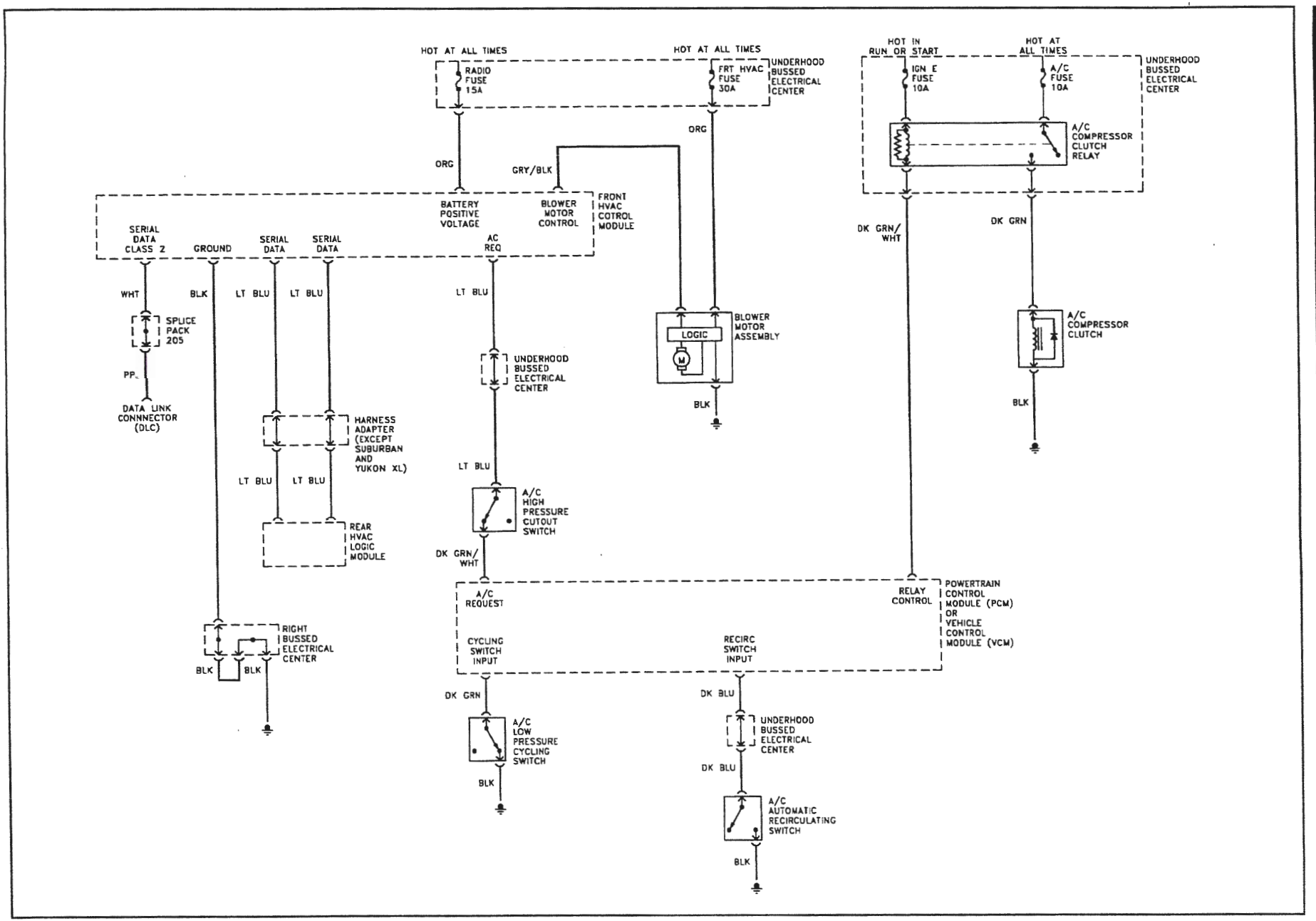

Heating and air-conditioning system – typical 2000 and later front circuit (part 2 of 2)

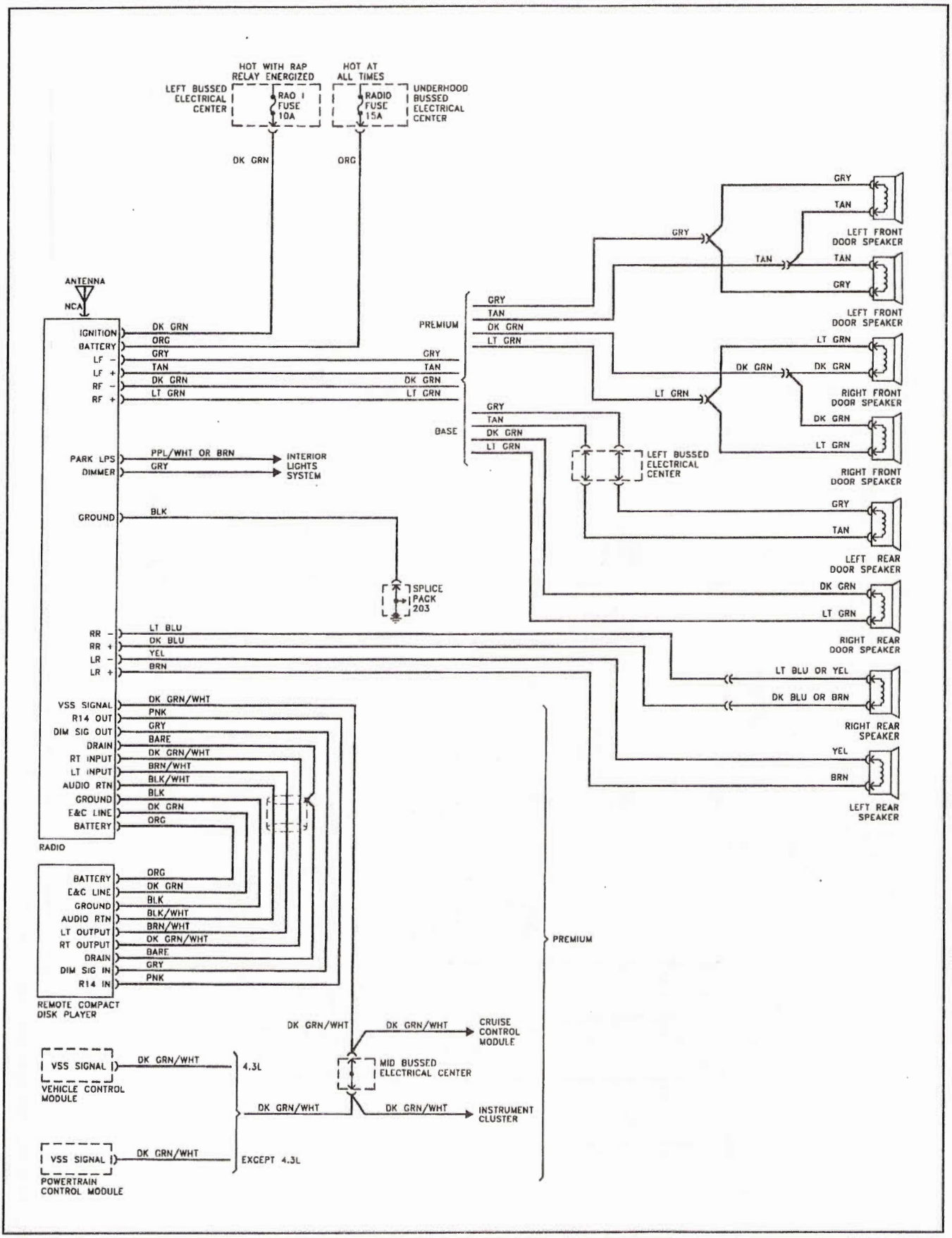

Audio system - typical

1999 AND LATER V6 SENSORS

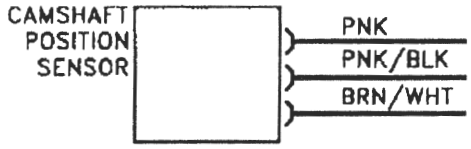

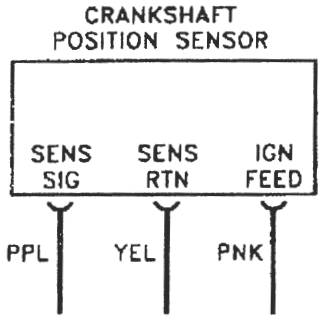

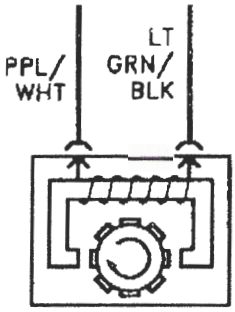

VEHICLE SPEED SENSOR

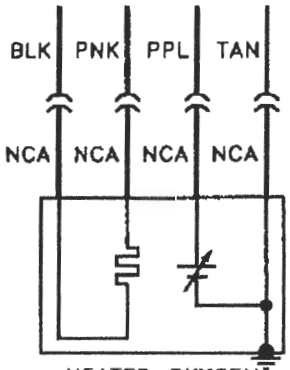

HEATED OXYGEN SENSOR (HO2S) BANK 2 SENSOR 1

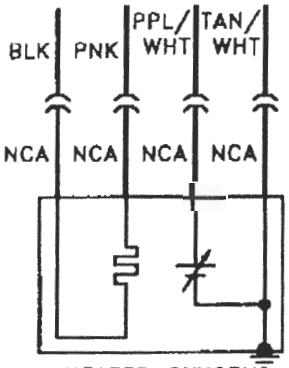

HEATED OXYGEN SENSOR (HO2S) BANK 1 SENSOR 1

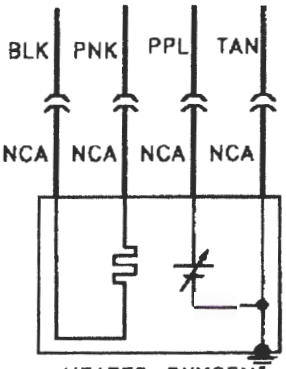

HEATED OXYGEN SENSOR (HO2S) BANK 2 SENSOR 2

SENSORS 1999 AND LATER V6

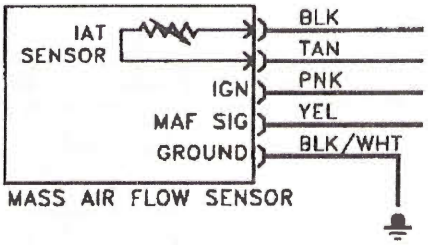

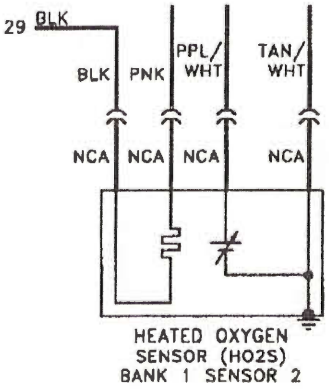

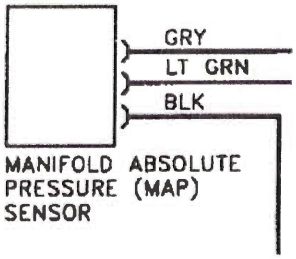

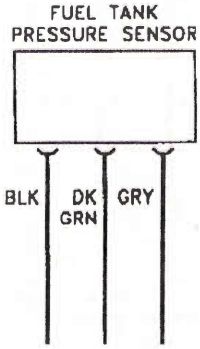

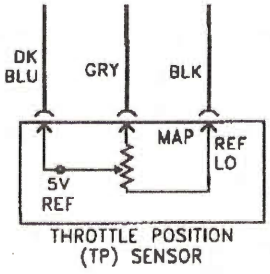

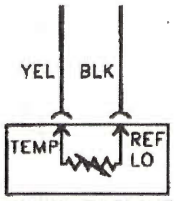

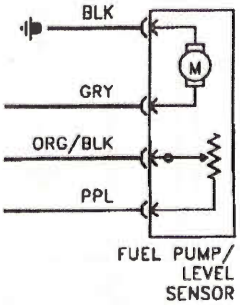

1999 AND LATER V8 SENSORS

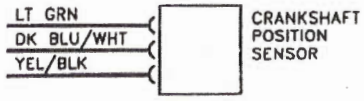

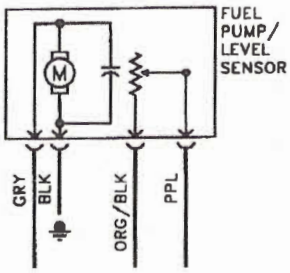

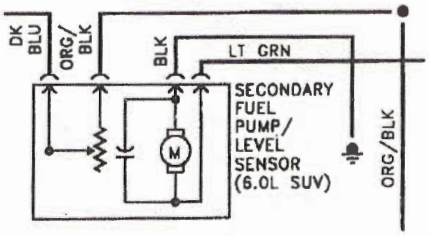

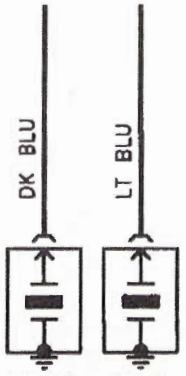

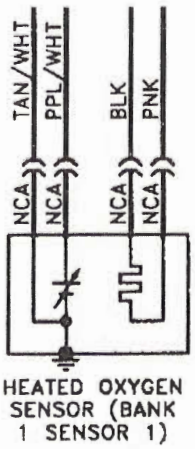

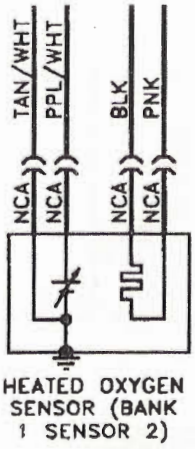

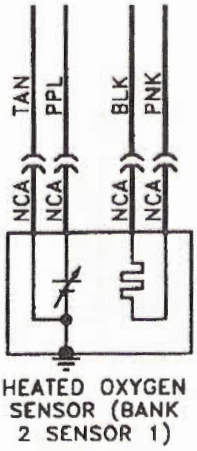

SENSORS 1999 AND LATER V8

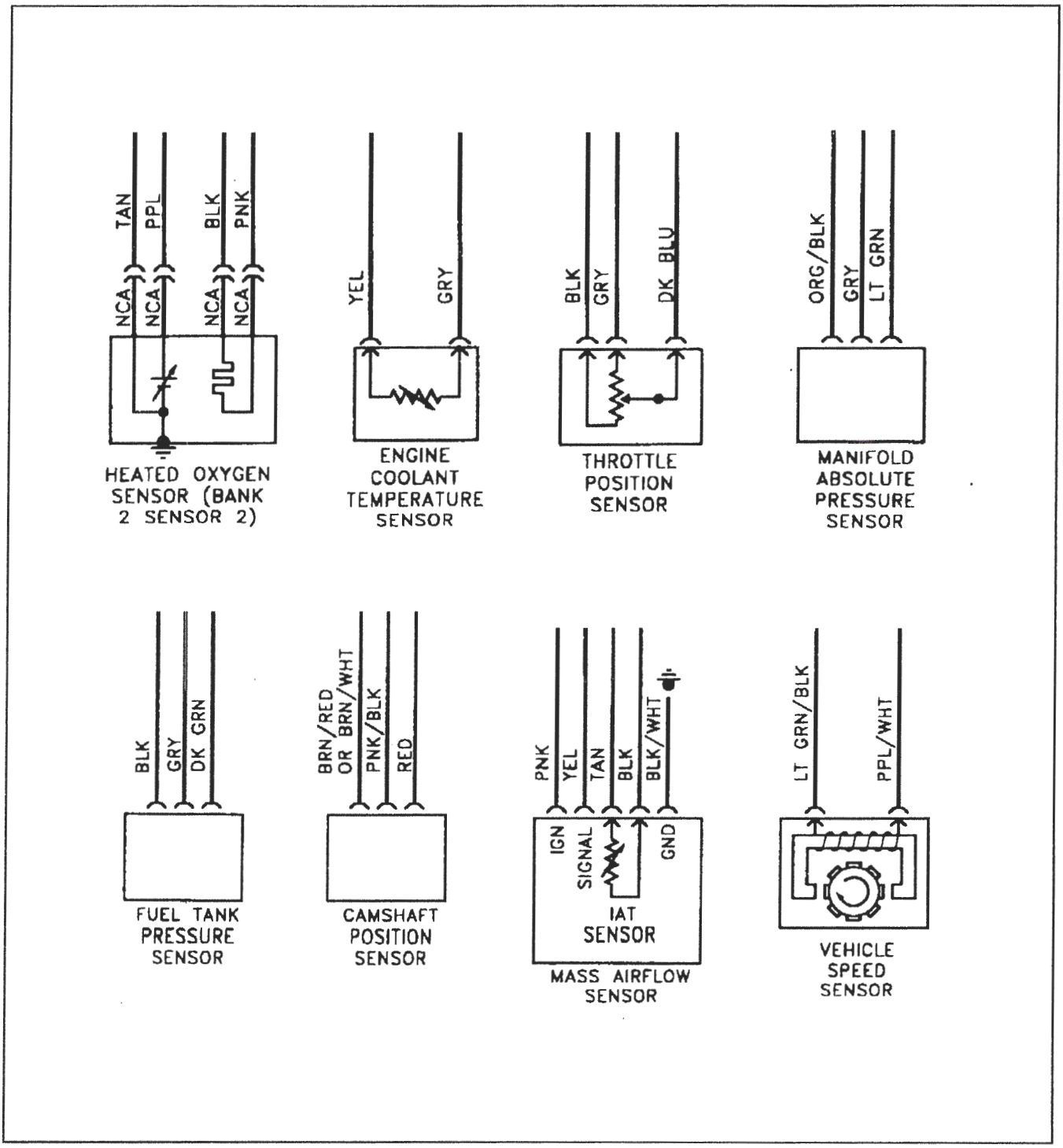

1999 AND LATER V6 SWITCHES

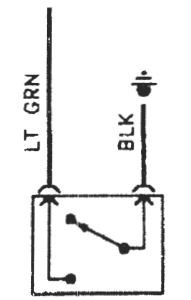

ENGINE COOLANT LEVEL SWITCH

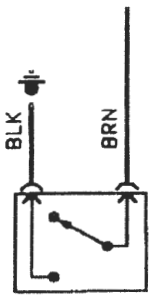

ENGINE OIL LEVEL SWITCH

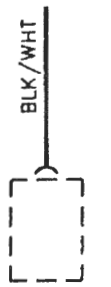

FRONT AXLE ACTUATOR/ SWITCH

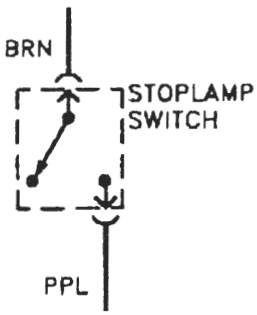

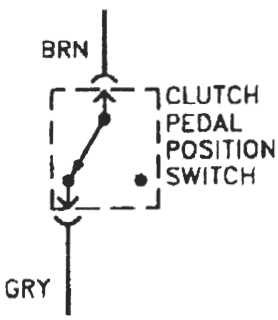

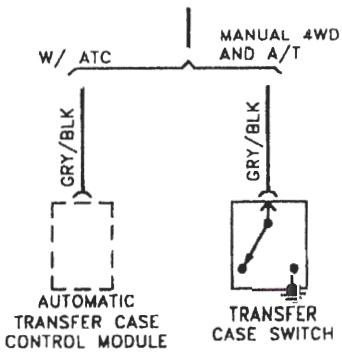

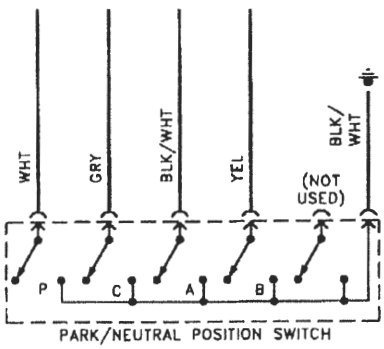

SWITCHES 1999 AND LATER V8

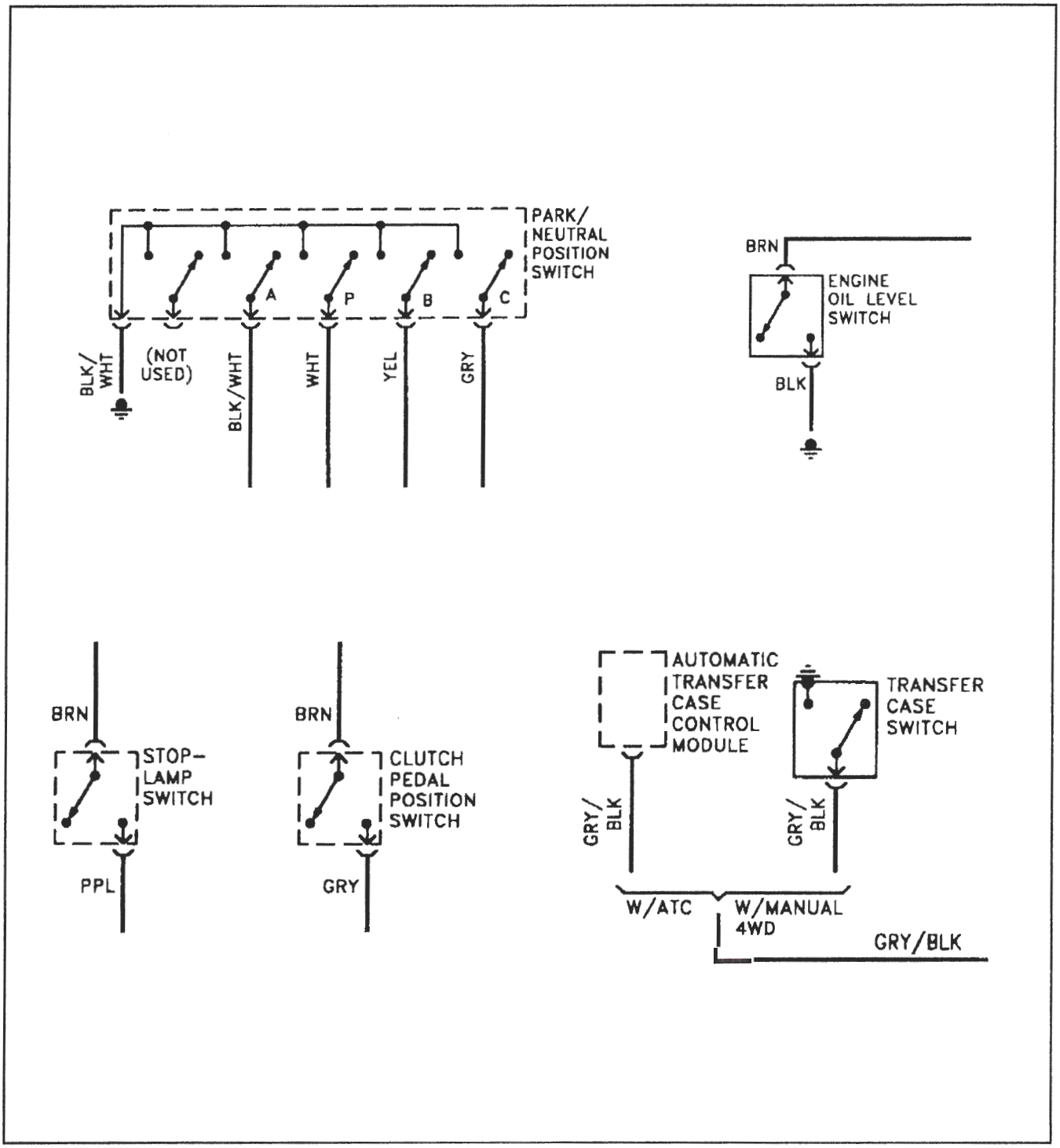

PICK-UP MODELS SWITCHES

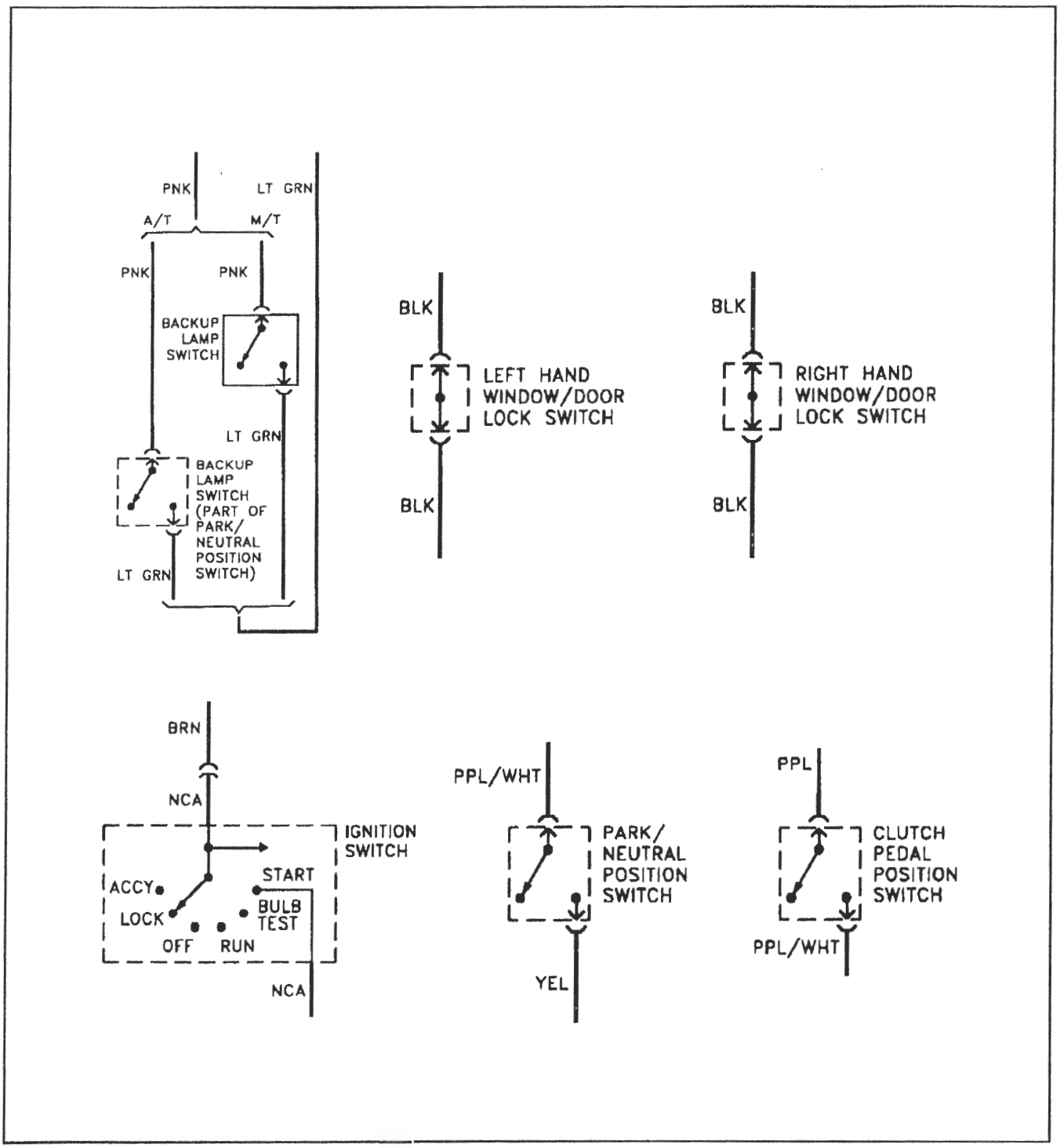

SWITCHES PICK-UP MODELS

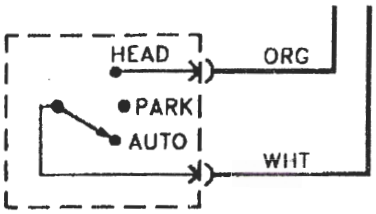

HEADLAMP AND PANEL DIMMER SWITCH

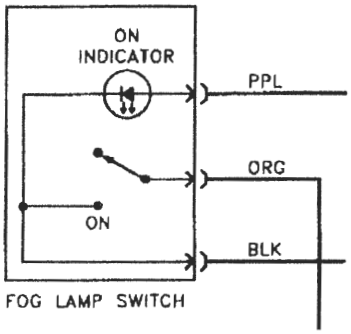

FOG LAMP SWITCH

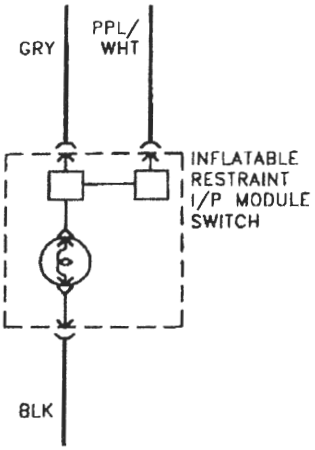

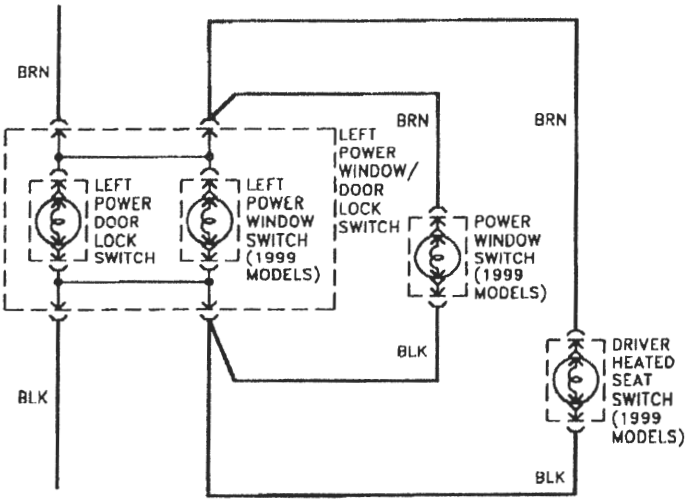

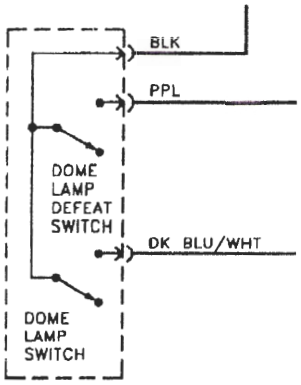

HEADLAMP AND PANEL DIMMER SWITCH

PICK-UP MODELS SWITCHES

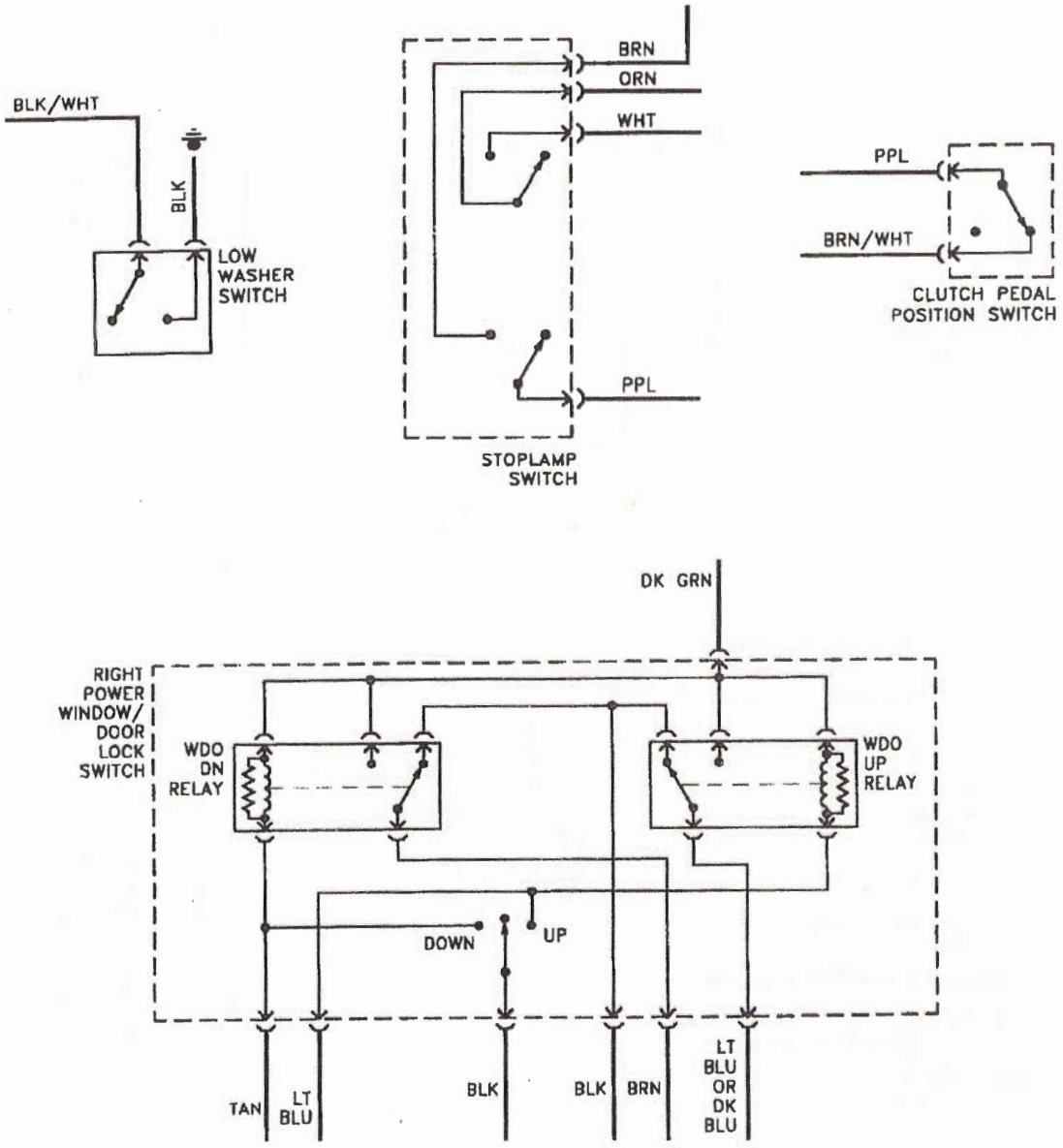

SWITCHES PICK-UP MODELS

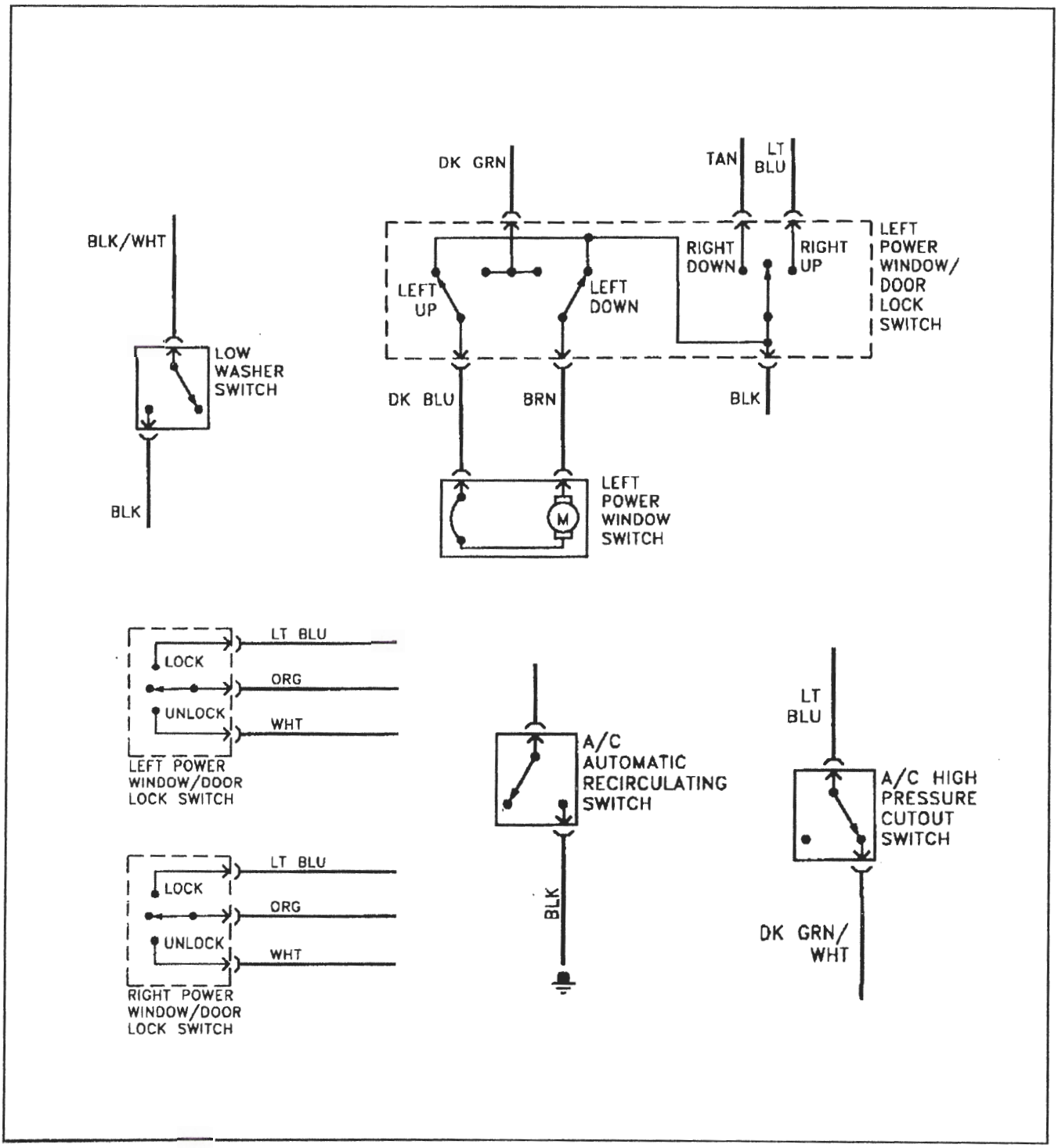

SUV MODELS SWITCHES

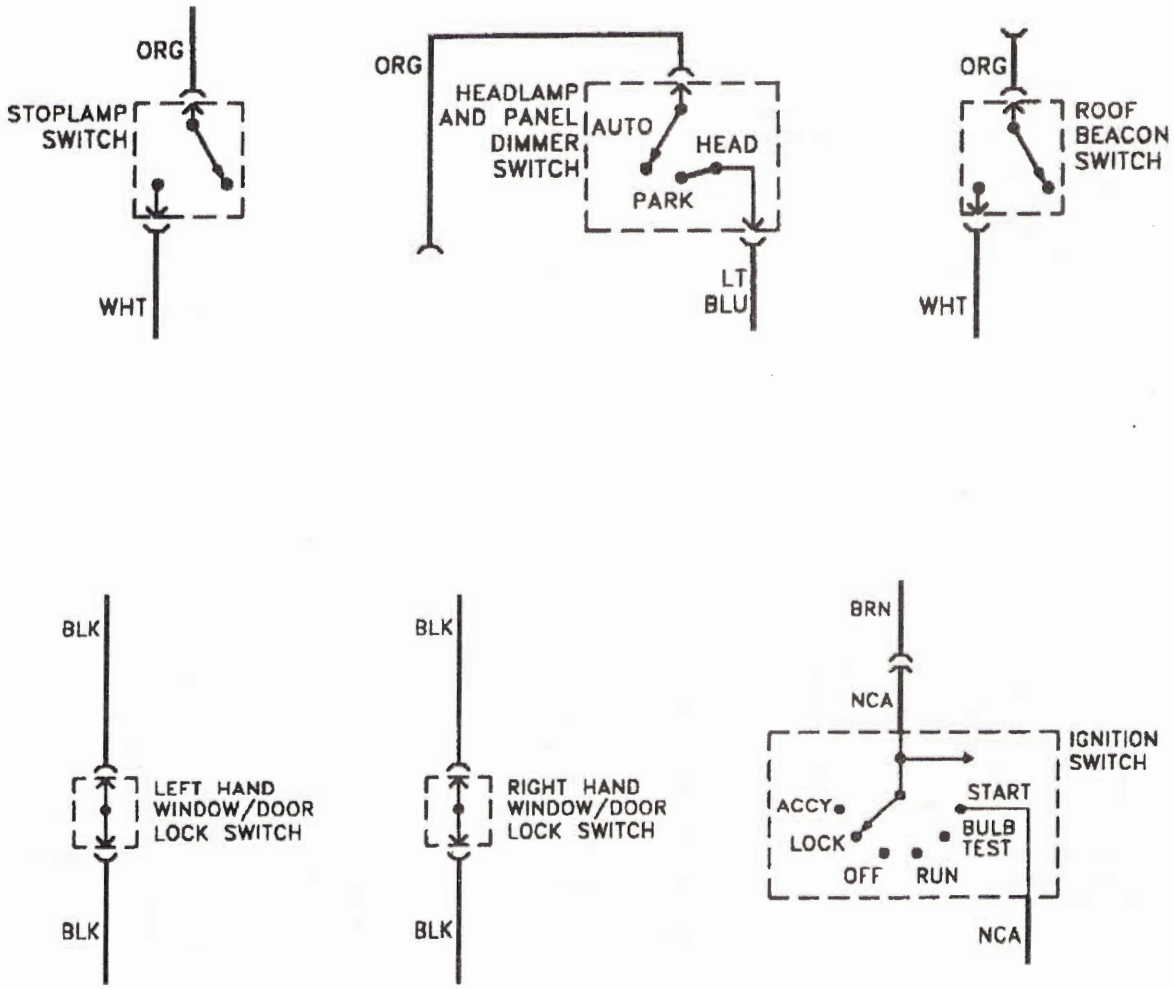

SWITCHES SUV MODELS

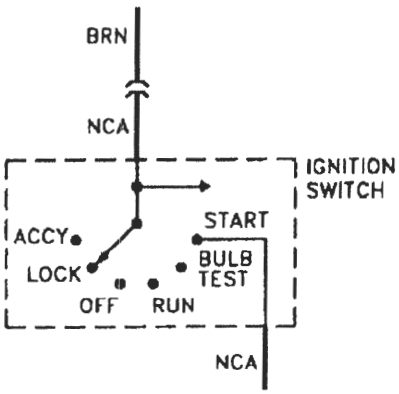

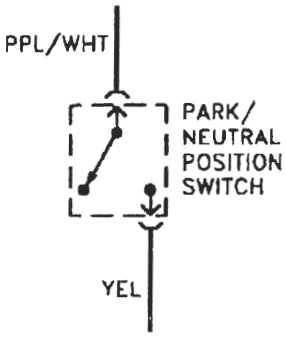

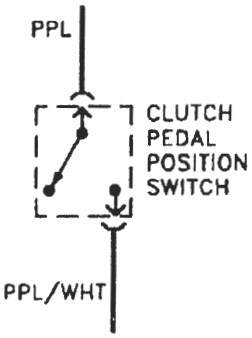

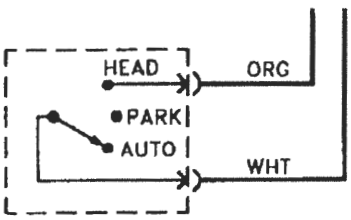

HEADLAMP AND PANEL DIMMER SWITCH

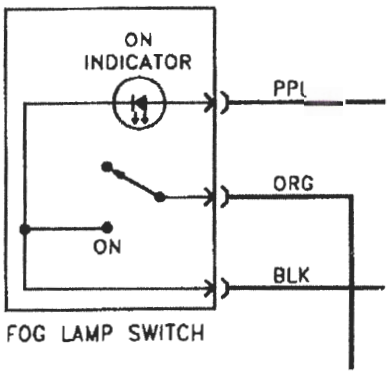

FOG LAMP SWITCH

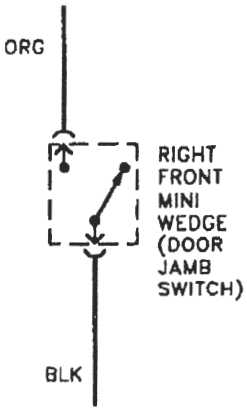

SUV MODELS SWITCHES

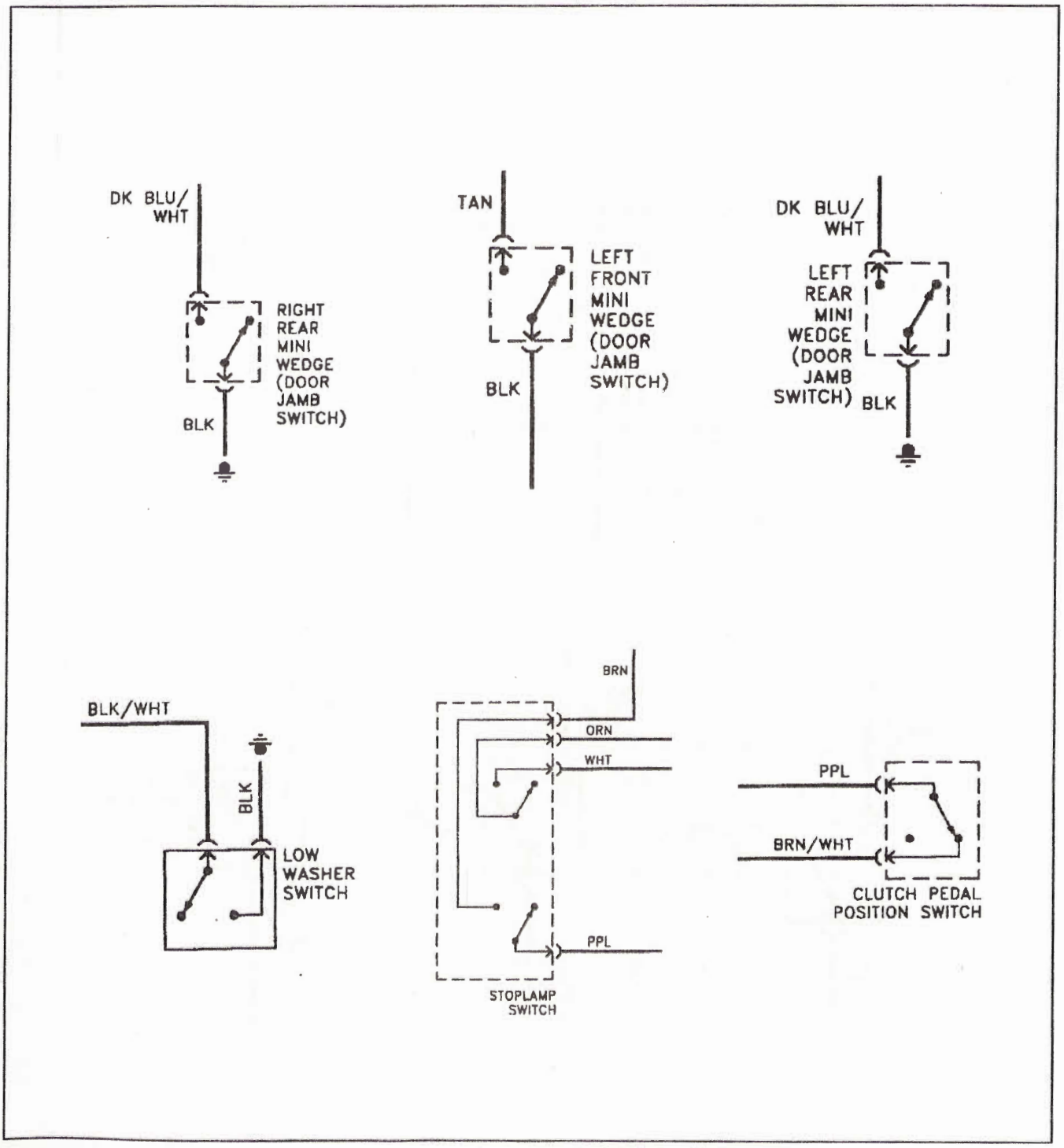

SWITCHES SUV MODELS

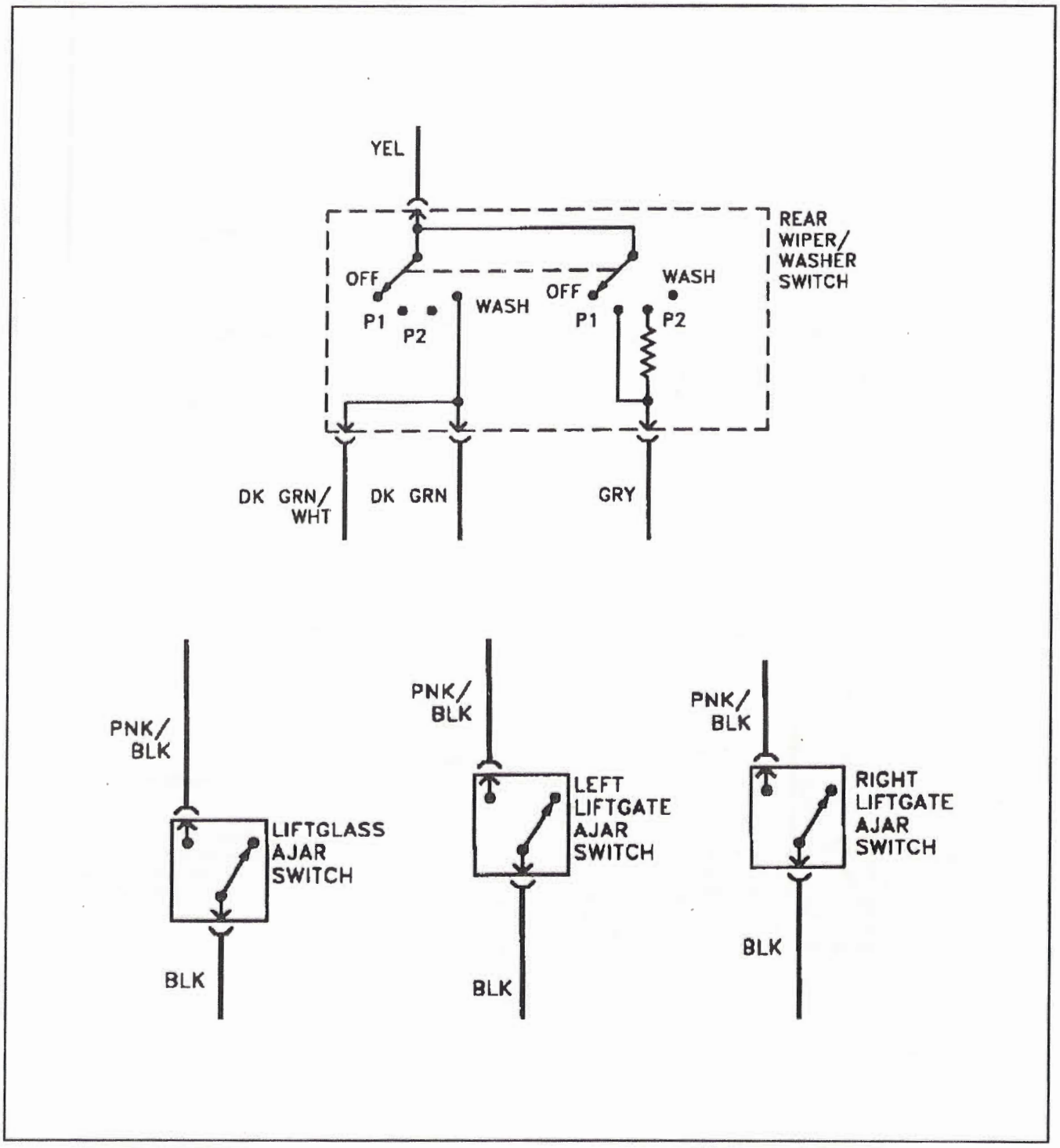

SUV MODELS SWITCHES

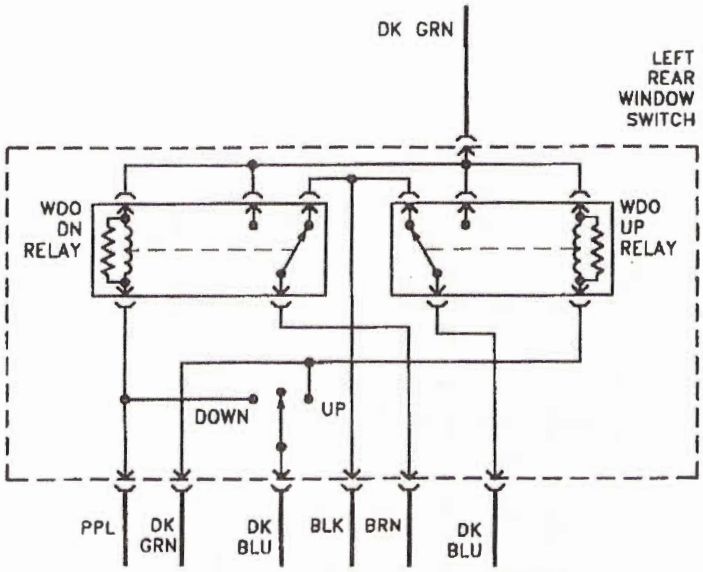

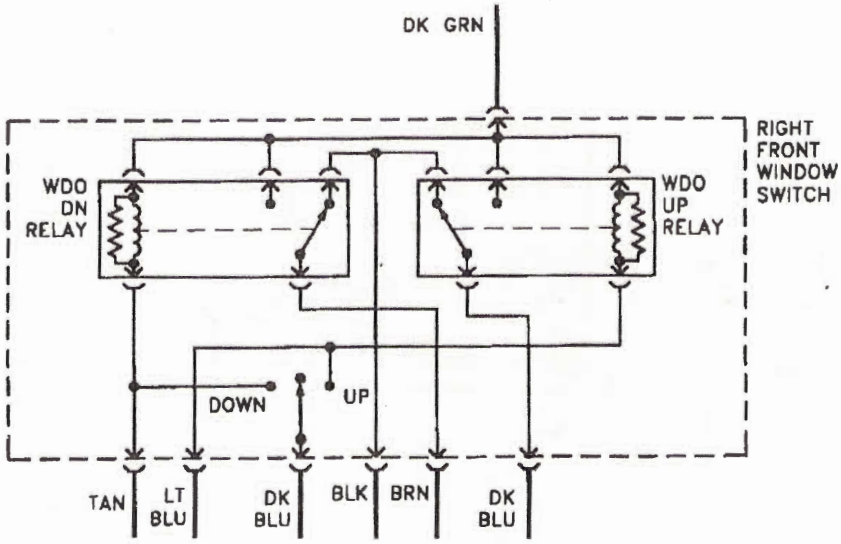

SWITCHES SUV MODELS

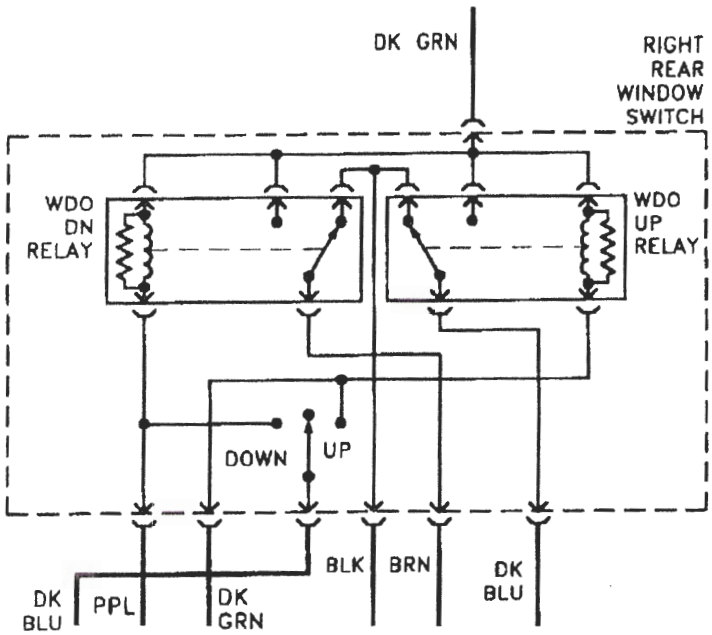

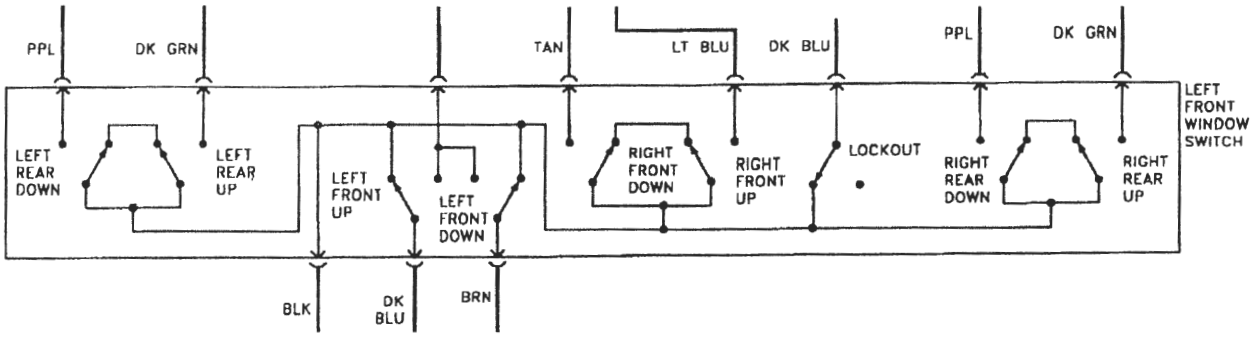

GLOSSARY

AIR/FUEL RATIO: The ratio of air-to-gasoline by weight in the fuel mixture drawn into the engine.

AIR INJECTION: One method of reducing harmful exhaust emissions by injecting air into each of the exhaust ports of an engine. The fresh air entering the hot exhaust manifold causes any remaining fuel to be burned before it can exit the tailpipe.

ALTERNATOR: A device used for converting mechanical energy into electrical energy.

AMMETER: An instrument, calibrated in amperes, used to measure the flow of an electrical current in a circuit. Ammeters are always connected in series with the circuit being tested.

AMPERE: The rate of flow of electrical current present when one volt of electrical pressure is applied against one ohm of electrical resistance.

ANALOG COMPUTER: Any microprocessor that uses similar (analogous) electrical signals to make its calculations.

ARMATURE: A laminated, soft iron core wrapped by a wire that converts electrical energy to mechanical energy as in a motor or relay. When rotated in a magnetic field, it changes mechanical energy into electrical energy as in a generator.

ATMOSPHERIC PRESSURE: The pressure on the Earth's surface caused by the weight of the air in the atmosphere. At sea level, this pressure is 14.7 psi at 32°F (101 kPa at 0°C).

ATOMIZATION: The breaking down of a liquid into a fine mist that can be suspended in air.

AXIAL PLAY: Movement parallel to a shaft or bearing bore.

BACKFIRE: The sudden combustion of gases in the intake or exhaust system that results in a loud explosion.

BACKLASH: The clearance or play between two parts, such as meshed gears.

BACKPRESSURE: Restrictions in the exhaust system that slow the exit of exhaust gases from the combustion chamber.

BAKELITE: A heat resistant, plastic insulator material commonly used in printed circuit boards and transistorized components.

BALL BEARING: A bearing made up of hardened inner and outer races between which hardened steel balls roll.

BALLAST RESISTOR: A resistor in the primary ignition circuit that lowers voltage after the engine is started to reduce wear on ignition components.

BEARING: A friction reducing, supportive device usually located between a stationary part and a moving part.

BIMETAL TEMPERATURE SENSOR: Any sensor or switch made of two dissimilar types of metal that bend when heated or cooled due to the different expansion rates of the alloys. These types of sensors usually function as an on/off switch.

BLOWBY: Combustion gases, composed of water vapor and unburned fuel, that leak past the piston rings into the crankcase during normal engine operation. These gases are removed by the PCV system to prevent the buildup of harmful acids in the crankcase.

BRAKE PAD: A brake shoe and lining assembly used with disc brakes.

BRAKE SHOE: The backing for the brake lining. The term is, however, usually applied to the assembly of the brake backing and lining.

BUSHING: A liner, usually removable, for a bearing; an anti-friction liner used in place of a bearing.

CALIPER: A hydraulically activated device in a disc brake system, which is mounted straddling the brake rotor (disc). The caliper contains at least one piston and two brake pads. Hydraulic pressure on the piston(s) forces the pads against the rotor.

CAMSHAFT: A shaft in the engine on which are the lobes (cams) which operate the valves. The camshaft is driven by the crankshaft, via a belt, chain or gears, at one half the crankshaft speed.

CAPACITOR: A device which stores an electrical charge.

CARBON MONOXIDE (CO): A colorless, odorless gas given off as a normal byproduct of combustion. It is poisonous and extremely dangerous in confined areas, building up slowly to toxic levels without warning if adequate ventilation is not available.

CARBURETOR: A device, usually mounted on the intake manifold of an engine, which mixes the air and fuel in the proper proportion to allow even combustion.

CATALYTIC CONVERTER: A device installed in the exhaust system, like a muffler, that converts harmful byproducts of combustion into carbon dioxide and water vapor by means of a heat-producing chemical reaction.

CENTRIFUGAL ADVANCE: A mechanical method of advancing the spark timing by using flyweights in the distributor that react to centrifugal force generated by the distributor shaft rotation.

CHECK VALVE: Any one-way valve installed to permit the flow of air, fuel or vacuum in one direction only.

CHOKE: A device, usually a moveable valve, placed in the intake path of a carburetor to restrict the flow of air.

CIRCUIT: Any unbroken path through which an electrical current can flow. Also used to describe fuel flow in some instances.

CIRCUIT BREAKER: A switch which protects an electrical circuit from overload by opening the circuit when the current flow exceeds a predetermined level. Some circuit breakers must be reset manually, while most reset automatically.

COIL (IGNITION): A transformer in the ignition circuit which steps up the voltage provided to the spark plugs.

COMBINATION MANIFOLD: An assembly which includes both the intake and exhaust manifolds in one casting.

COMBINATION VALVE: A device used in some fuel systems that routes fuel vapors to a charcoal storage canister instead of venting them into the atmosphere. The valve relieves fuel tank pressure and allows fresh air into the tank as the fuel level drops to prevent a vapor lock situation.

COMPRESSION RATIO: The comparison of the total volume of the cylinder and combustion chamber with the piston at BDC and the piston at TDC.

CONDENSER: 1. An electrical device which acts to store an electrical charge, preventing voltage surges. 2. A radiator-like device in the air conditioning system in which refrigerant gas condenses into a liquid, giving off heat.

CONDUCTOR: Any material through which an electrical current can be transmitted easily.

CONTINUITY: Continuous or complete circuit. Can be checked with an ohmmeter.

COUNTERSHAFT: An intermediate shaft which is rotated by a mainshaft and transmits, in turn, that rotation to a working part.

CRANKCASE: The lower part of an engine in which the crankshaft and related parts operate.

CRANKSHAFT: The main driving shaft of an engine which receives reciprocating motion from the pistons and converts it to rotary motion.

CYLINDER: In an engine, the round hole in the engine block in which the piston(s) ride.

CYLINDER BLOCK: The main structural member of an engine in which is found the cylinders, crankshaft and other principal parts.

CYLINDER HEAD: The detachable portion of the engine, usually fastened to the top of the cylinder block and containing all or most of the combustion chambers. On overhead valve engines, it contains the valves and their operating parts. On overhead cam engines, it contains the camshaft as well.

DEAD CENTER: The extreme top or bottom of the piston stroke.

DETONATION: An unwanted explosion of the air/fuel mixture in the combustion chamber caused by excess heat and compression, advanced timing, or an overly lean mixture. Also referred to as "ping".

DIAPHRAGM: A thin, flexible wall separating two cavities, such as in a vacuum advance unit.

DIESELING: A condition in which hot spots in the combustion chamber cause the engine to run on after the key is turned off.

DIFFERENTIAL: A geared assembly which allows the transmission of motion between drive axles, giving one axle the ability to turn faster than the other.

DIODE: An electrical device that will allow current to flow in one direction only.

DISC BRAKE: A hydraulic braking assembly consisting of a brake disc, or rotor, mounted on an axle, and a caliper assembly containing, usually two brake pads which are activated by hydraulic pressure. The pads are forced against the sides of the disc, creating friction which slows the vehicle.

DISTRIBUTOR: A mechanically driven device on an engine which is responsible for electrically firing the spark plug at a predetermined point of the piston stroke.

DOWEL PIN: A pin, inserted in mating holes in two different parts allowing those parts to maintain a fixed relationship.

DRUM BRAKE: A braking system which consists of two brake shoes and one or two wheel cylinders, mounted on a fixed backing plate, and a brake drum, mounted on an axle, which revolves around the assembly.

DWELL: The rate, measured in degrees of shaft rotation, at which an electrical circuit cycles on and off.

ELECTRONIC CONTROL UNIT (ECU): Ignition module, module, amplifier or igniter. See Module for definition.

ELECTRONIC IGNITION: A system in which the timing and firing of the spark plugs is controlled by an electronic control unit, usually called a module. These systems have no points or condenser.

END-PLAY: The measured amount of axial movement in a shaft.

ENGINE: A device that converts heat into mechanical energy.

EXHAUST MANIFOLD: A set of cast passages or pipes which conduct exhaust gases from the engine.

FEELER GAUGE: A blade, usually metal, of precisely predetermined thickness, used to measure the clearance between two parts.

FIRING ORDER: The order in which combustion occurs in the cylinders of an engine. Also the order in which spark is distributed to the plugs by the distributor.

FLOODING: The presence of too much fuel in the intake manifold and combustion chamber which prevents the air/fuel mixture from firing, thereby causing a no-start situation.

FLYWHEEL: A disc shaped part bolted to the rear end of the crankshaft. Around the outer perimeter is affixed the ring gear. The starter drive engages the ring gear, turning the flywheel, which rotates the crankshaft, imparting the initial starting motion to the engine.

FOOT POUND (ft. lbs. or sometimes, ft.lb.): The amount of energy or work needed to raise an item weighing one pound, a distance of one foot.

FUSE: A protective device in a circuit which prevents circuit overload by breaking the circuit when a specific amperage is present. The device is constructed around a strip or wire of a lower amperage rating than the circuit it is designed to protect. When an amperage higher than that stamped on the fuse is present in the circuit, the strip or wire melts, opening the circuit.

GEAR RATIO: The ratio between the number of teeth on meshing gears.

GENERATOR: A device which converts mechanical energy into electrical energy.

HEAT RANGE: The measure of a spark plug's ability to dissipate heat from its firing end. The higher the heat range, the hotter the plug fires.

HUB: The center part of a wheel or gear.

HYDROCARBON (HC): Any chemical compound made up of hydrogen and carbon. A major pollutant formed by the engine as a byproduct of combustion.

HYDROMETER: An instrument used to measure the specific gravity of a solution.

INCH POUND (inch lbs.; sometimes in.lb. or in. lbs.): One twelfth of a foot pound.

INDUCTION: A means of transferring electrical energy in the form of a magnetic field. Principle used in the ignition coil to increase voltage.

INJECTOR: A device which receives metered fuel under relatively low pressure and is activated to inject the fuel into the engine under relatively high pressure at a predetermined time.

INPUT SHAFT: The shaft to which torque is applied, usually carrying the driving gear or gears.

INTAKE MANIFOLD: A casting of passages or pipes used to conduct air or a fuel/air mixture to the cylinders.

JOURNAL: The bearing surface within which a shaft operates.

KEY: A small block usually fitted in a notch between a shaft and a hub to prevent slippage of the two parts.

MANIFOLD: A casting of passages or set of pipes which connect the cylinders to an inlet or outlet source.

MANIFOLD VACUUM: Low pressure in an engine intake manifold formed just below the throttle plates. Manifold vacuum is highest at idle and drops under acceleration.

MASTER CYLINDER: The primary fluid pressurizing device in a hydraulic system. In automotive use, it is found in brake and hydraulic clutch systems and is pedal activated, either directly or, in a power brake system, through the power booster.

MODULE: Electronic control unit, amplifier or igniter of solid state or integrated design which controls the current flow in the ignition primary circuit based on input from the pick-up coil. When the module opens the primary circuit, high secondary voltage is induced in the coil.

NEEDLE BEARING: A bearing which consists of a number (usually a large number) of long, thin rollers.

OHM: (Ω) The unit used to measure the resistance of conductor-to-electrical flow. One ohm is the amount of resistance that limits current flow to one ampere in a circuit with one volt of pressure.

OHMMETER: An instrument used for measuring the resistance, in ohms, in an electrical circuit.

OUTPUT SHAFT: The shaft which transmits torque from a device, such as a transmission.

OVERDRIVE: A gear assembly which produces more shaft revolutions than that transmitted to it.

OVERHEAD CAMSHAFT (OHC): An engine configuration in which the camshaft is mounted on top of the cylinder head and operates the valve either directly or by means of rocker arms.

OVERHEAD VALVE (OHV): An engine configuration in which all of the valves are located in the cylinder head and the camshaft is located in the cylinder block. The camshaft operates the valves via lifters and pushrods.

OXIDES OF NITROGEN (NOx): Chemical compounds of nitrogen produced as a byproduct of combustion. They combine with hydrocarbons to produce smog.

OXYGEN SENSOR: Use with the feedback system to sense the presence of oxygen in the exhaust gas and signal the computer which can reference the voltage signal to an air/fuel ratio.

PINION: The smaller of two meshing gears.

PISTON RING: An open-ended ring with fits into a groove on the outer diameter of the piston. Its chief function is to form a seal between the piston and cylinder wall. Most automotive pistons have three rings: two for compression sealing; one for oil sealing.

PRELOAD: A predetermined load placed on a bearing during assembly or by adjustment.

PRIMARY CIRCUIT: the low voltage side of the ignition system which consists of the ignition switch, ballast resistor or resistance wire, bypass, coil, electronic control unit and pick-up coil as well as the connecting wires and harnesses.

PRESS FIT: The mating of two parts under pressure, due to the inner diameter of one being smaller than the outer diameter of the other, or vice versa; an interference fit.

RACE: The surface on the inner or outer ring of a bearing on which the balls, needles or rollers move.

REGULATOR: A device which maintains the amperage and/or voltage levels of a circuit at predetermined values.

RELAY: A switch which automatically opens and/or closes a circuit.

RESISTANCE: The opposition to the flow of current through a circuit or electrical device, and is measured in ohms. Resistance is equal to the voltage divided by the amperage.

RESISTOR: A device, usually made of wire, which offers a preset amount of resistance in an electrical circuit.

RING GEAR: The name given to a ring-shaped gear attached to a differential case, or affixed to a flywheel or as part of a planetary gear set.

ROLLER BEARING: A bearing made up of hardened inner and outer races between which hardened steel rollers move.

ROTOR: 1. The disc-shaped part of a disc brake assembly, upon which the brake pads bear; also called, brake disc. 2. The device mounted atop the distributor shaft, which passes current to the distributor cap tower contacts.

SECONDARY CIRCUIT: The high voltage side of the ignition system, usually above 20,000 volts. The secondary includes the ignition coil, coil wire, distributor cap and rotor, spark plug wires and spark plugs.

SENDING UNIT: A mechanical, electrical, hydraulic or electro-magnetic device which transmits information to a gauge.

SENSOR: Any device designed to measure engine operating conditions or ambient pressures and temperatures. Usually electronic in nature and designed to send a voltage signal to an on-board computer, some sensors may operate as a simple on/off switch or they may provide a variable voltage signal (like a potentiometer) as conditions or measured parameters change.

SHIM: Spacers of precise, predetermined thickness used between parts to establish a proper working relationship.

SLAVE CYLINDER: In automotive use, a device in the hydraulic clutch system which is activated by hydraulic force, disengaging the clutch.

SOLENOID: A coil used to produce a magnetic field, the effect of which is to produce work.

SPARK PLUG: A device screwed into the combustion chamber of a spark ignition engine. The basic construction is a conductive core inside of a ceramic insulator, mounted in an outer conductive base. An electrical charge from the spark plug wire travels along the conductive core and jumps a preset air gap to a grounding point or points at the end of the conductive base. The resultant spark ignites the fuel/air mixture in the combustion chamber.

SPLINES: Ridges machined or cast onto the outer diameter of a shaft or inner diameter of a bore to enable parts to mate without rotation.

TACHOMETER: A device used to measure the rotary speed of an engine, shaft, gear, etc., usually in rotations per minute.

THERMOSTAT: A valve, located in the cooling system of an engine, which is closed when cold and opens gradually in response to engine heating, controlling the temperature of the coolant and rate of coolant flow.

TOP DEAD CENTER (TDC): The point at which the piston reaches the top of its travel on the compression stroke.

TORQUE: The twisting force applied to an object.

TORQUE CONVERTER: A turbine used to transmit power from a driving member to a driven member via hydraulic action, providing changes in drive ratio and torque. In automotive use, it links the driveplate at the rear of the engine to the automatic transmission.

TRANSDUCER: A device used to change a force into an electrical signal.

TRANSISTOR: A semi-conductor component which can be actuated by a small voltage to perform an electrical switching function.

TUNE-UP: A regular maintenance function, usually associated with the replacement and adjustment of parts and components in the electrical and fuel systems of a vehicle for the purpose of attaining optimum performance.

TURBOCHARGER: An exhaust driven pump which compresses intake air and forces it into the combustion chambers at higher than atmospheric pressures. The increased air pressure allows more fuel to be burned and results in increased horsepower being produced.

VACUUM ADVANCE: A device which advances the ignition timing in response to increased engine vacuum.

VACUUM GAUGE: An instrument used to measure the presence of vacuum in a chamber.

VALVE: A device which control the pressure, direction of flow or rate of flow of a liquid or gas.

VALVE CLEARANCE: The measured gap between the end of the valve stem and the rocker arm, cam lobe or follower that activates the valve.

VISCOSITY: The rating of a liquid's internal resistance to flow.

VOLTMETER: An instrument used for measuring electrical force in units called volts. Voltmeters are always connected parallel with the circuit being tested.

WHEEL CYLINDER: Found in the automotive drum brake assembly, it is a device, actuated by hydraulic pressure, which, through internal pistons, pushes the brake shoes outward against the drums.

MASTER INDEX

A

ABOUT THIS MANUAL, 0-5
ACCELERATOR CABLE/THROTTLE ACTUATOR CONTROL (TAC) SYSTEM, REPLACEMENT, 4-12
ACCELERATOR PEDAL POSITION (APP) SENSOR, REPLACEMENT, 6-20
ACKNOWLEDGEMENTS, 0-2
AIR CONDITIONING
accumulator/drier, removal and installation, 3-18
and heating system, check and maintenance, 3-15
compressor, removal and installation, 3-19
condenser, removal and installation, 3-20
expansion (orifice) tube, removal and installation, 3-21
AIR FILTER
housing, removal and installation, 4-11
replacement, 1-25
AIRBAG SYSTEM, GENERAL INFORMATION, 12-25
ALIGNMENT, GENERAL INFORMATION, 10-26
ALTERNATOR, REMOVAL AND INSTALLATION, 5-12
ANTENNA, REMOVAL AND INSTALLATION, 12-13
ANTIFREEZE, GENERAL INFORMATION, 3-2
ANTI-LOCK BRAKE SYSTEM (ABS), GENERAL INFORMATION, 9-2
ANTI-THEFT AUDIO SYSTEM, 0-18
AUTOMATIC TRANSMISSION, 7B-1 THROUGH 7B-12
diagnosis, general, 7B-2
extension housing oil seal (2WD), replacement, 7B-8
fluid and filter change, 1-32
fluid level check, 1-10
mount, check and replacement, 7B-8
Park/Lock system, description and component replacement, 7B-5
Park/Neutral Position (PNP) switch/back-up light switch, check, replacement and adjustment, 7B-7
removal and installation, 7B-9
shift cable, removal, installation and adjustment, 7B-3
AUTOMOTIVE CHEMICALS AND LUBRICANTS, 0-21
AXLE ASSEMBLY (REAR), REMOVAL AND INSTALLATION, 8-16
AXLES, DESCRIPTION AND CHECK, 8-11
AXLESHAFT
bearing (rear, semi-floating axle), replacement, 8-13
oil seal (rear, semi-floating axle), replacement, 8-13
oil seals and bearings (front, 4WD models), replacement, 8-24
rear, removal and installation, 8-12

B

BACK-UP LIGHT SWITCH, CHECK AND REPLACEMENT, 7A-2
BALANCE SHAFT (V6 ENGINES)
and bearings, removal and inspection, 2C-16
installation, 2C-28
BALLJOINTS, CHECK AND REPLACEMENT, 10-10
BATTERY
cables, replacement, 5-5
check and replacement, 5-3
check, maintenance and charging, 1-13
emergency jump starting, 0-17
BLOWER MOTOR
and circuit, check, 3-9
removal and installation, 3-10

BODY, 11-1 THROUGH 11-32
bumpers, removal and installation, 11-10
center console, removal and installation, 11-23
cowl cover, removal and installation, 11-12
dashboard trim panels, removal and installation, 11-25
door
latch, lock cylinder and handles, removal and installation, 11-15
removal and installation, 11-15
trim panels, removal and installation, 11-13
door window glass
regulator, removal and installation, 11-18
removal and installation, 11-18
filling and painting, 11-4
front fender, removal and installation, 11-11
hinges and locks, maintenance, 11-7
hood latch and release cable, removal and installation, 11-9
hood, removal, installation and adjustment, 11-8
instrument panel and cowl support structure, removal and installation, 11-27
liftgate
and liftgate glass (SUV models), removal and installation, 11-20
panels, lock cylinder, latch and support struts (SUV models), removal and installation, 11-21
maintenance, 11-2
mirrors, removal and installation, 11-18
radiator grille, removal and installation, 11-7
repair
major damage, 11-6
minor damage, 11-3
seats, removal and installation, 11-30
steering column covers, removal and installation, 11-27
tailgate
latch and handle (pick-up models), removal and installation, 11-20
pick-up models, removal and installation, 11-19
upholstery and carpets, maintenance, 11-2
vinyl trim, maintenance, 11-2
windshield and fixed glass, replacement, 11-7
BOOSTER BATTERY (JUMP) STARTING, 0-17
BRAKES, 9-1 THROUGH 9-20
Anti-lock Brake System (ABS), general information, 9-2
brake disc, inspection, removal and installation, 9-7
brake light switch, check, adjustment and replacement, 9-20
caliper, removal and installation, 9-6
disc brake pads, replacement, 9-3
fluid change, 1-24
hoses and lines, inspection and replacement, 9-13
hydraulic system, bleeding, 9-15
master cylinder, removal, installation and reservoir/O-ring replacement, 9-11
parking brake
adjustment, 9-18
shoes, replacement, 9-19
pedal and cables, replacement, 9-18
pedal travel, check, 9-17
power brake booster, check, removal and installation, 9-16
shoes, drum brake, replacement, 9-9
system check, 1-21
wheel cylinder, removal and installation, 9-11
BULB REPLACEMENT, 12-15
BUMPERS, REMOVAL AND INSTALLATION, 11-10
BUYING PARTS, 0-7

C

CAMSHAFT AND LIFTERS, REMOVAL AND INSTALLATION
4.3L V6 engine, 2A-15
V8 engines, 2B-16
CAMSHAFT POSITION (CMP) SENSOR, REPLACEMENT, 6-15
CAMSHAFT, LIFTERS AND BEARINGS, REMOVAL AND INSPECTION, 2C-14
CATALYTIC CONVERTER, 6-25
CENTER CONSOLE, REMOVAL AND INSTALLATION, 11-23
CHARGING SYSTEM
check, 5-11
general information and precautions, 5-11
CHASSIS ELECTRICAL SYSTEM, 12-1 THROUGH 12-76
airbag system, general information, 12-25
antenna, removal and installation, 12-13
bulb replacement, 12-15
circuit breakers, general information and check, 12-5
cruise control system, description and check, 12-22
Data Link Communication system, description, 12-25
Daytime Running Lights (DRL), general information, 12-20
door lock and keyless entry system, power, description and check, 12-23
electric side view mirrors, description and check, 12-24
electrical troubleshooting, general information, 12-2
fuel, temperature and oil pressure gauges check, 12-10
fuses and fusible links, general information, 12-4
headlight bulb, replacement, 12-13
headlight housing, replacement, 12-15
headlights and fog lights, adjustment, 12-14
horn, check and replacement, 12-20
ignition switch and key lock cylinder, replacement, 12-8
instrument cluster, removal and installation, 12-10
instrument panel switches, replacement, 12-9
power seats, description and check, 12-25
radio and speakers, removal and installation, 12-11
rear window defogger (SUV models), check and repair, 12-20
relays, general information and testing, 12-6
steering column switches, replacement, 12-7
turn signal and hazard flashers, check and replacement, 12-7
window system, power, description and check, 12-23
wiper motor, check and replacement, 12-19
wiring diagrams, general information, 12-27
CHASSIS LUBRICATION, 1-19
CIRCUIT BREAKERS, GENERAL INFORMATION AND CHECK, 12-5
CLUTCH
components, removal, inspection and installation, 8-3
description and check, 8-2

hydraulic system, bleeding, 8-3
master cylinder, removal and installation, 8-2
release cylinder and bearing, removal and installation, 8-3
start switch, check and replacement, 8-6
CLUTCH AND DRIVELINE, 8-1 THROUGH 8-26
COIL SPRING, REMOVAL AND INSTALLATION
front, 10-8
rear, 10-15
COMPRESSION CHECK, 2C-3
CONVERSION FACTORS, 0-20
COOLANT TEMPERATURE GAUGE SENDING UNIT, CHECK AND REPLACEMENT, 3-8
COOLING, HEATING AND AIR CONDITIONING SYSTEMS, 3-1 THROUGH 3-22
air conditioning
accumulator/drier, removal and installation, 3-18
and heating system, check and maintenance, 3-15
compressor, removal and installation, 3-19
condenser, removal and installation, 3-20
expansion (orifice) tube, removal and installation, 3-21
antifreeze, general information, 3-2
blower motor
and circuit, check, 3-9
removal and installation, 3-10
coolant temperature gauge sending unit, check and replacement, 3-8
engine cooling fan and clutch, check and replacement, 3-4
heater and air conditioning control assembly, removal and installation, 3-11
heater core, removal and installation, 3-12
radiator and coolant surge tank, removal and installation, 3-5
thermostat, check and replacement, 3-3
water pump, check and replacement, 3-7
COOLING SYSTEM
check, 1-17
servicing, 1-28
COWL COVER, REMOVAL AND INSTALLATION, 11-12
CRANKCASE VENTILATION SYSTEM, 6-20
CRANKSHAFT BALANCER, REMOVAL AND INSTALLATION
4.3L V6 engine, 2A-9
V8 engines, 2B-13
CRANKSHAFT FRONT OIL SEAL, REMOVAL, REPLACEMENT AND INSTALLATION
4.3L V6 engine, 2A-12
V8 engines, 2B-14
CRANKSHAFT
inspection, 2C-23
installation and main bearing oil clearance check, 2C-27
removal, 2C-17
CRANKSHAFT POSITION (CKP) SENSOR, REPLACEMENT, 6-14
CRUISE CONTROL SYSTEM, DESCRIPTION AND CHECK, 12-22
CYLINDER HEAD
cleaning and inspection, 2C-10
disassembly, 2C-9
reassembly, 2C-13
removal and installation
4.3L V6 engine, 2A-9
V8 engines, 2B-11
CYLINDER HONING, 2C-21

D

DASHBOARD TRIM PANELS, REMOVAL AND INSTALLATION, 11-25
DATA LINK COMMUNICATION SYSTEM, DESCRIPTION, 12-25
DAYTIME RUNNING LIGHTS (DRL), GENERAL INFORMATION, 12-20
DIFFERENTIAL CARRIER, FRONT, REMOVAL AND INSTALLATION, 8-25
DIFFERENTIAL LUBRICANT
change, 1-34
level check, 1-19
DISC BRAKE PADS, REPLACEMENT, 9-3
DISTRIBUTOR (V6 MODELS), REMOVAL AND INSTALLATION, 5-10
DOOR
latch, lock cylinder and handles, removal and installation, 11-15
lock and keyless entry system, power, description and check, 12-23
removal and installation, 11-15
trim panels, removal and installation, 11-13
DOOR WINDOW GLASS
regulator, removal and installation, 11-18
removal and installation, 11-18
DRIVEAXLES (4WD MODELS)
boot, replacement, 8-17
general information and inspection, 8-16
removal and installation, 8-16
DRIVEBELT CHECK, ADJUSTMENT AND REPLACEMENT, 1-15
DRIVESHAFT
and universal joints, general information and inspection, 8-7
center support bearing, replacement, 8-9
removal and installation, 8-8
DRUM BRAKE SHOES, REPLACEMENT, 9-9

E

ELECTRIC SIDE VIEW MIRRORS, DESCRIPTION AND CHECK, 12-24
ELECTRICAL TROUBLESHOOTING, GENERAL INFORMATION, 12-2
EMISSIONS AND ENGINE CONTROL SYSTEMS, 6-1 THROUGH 6-26
Accelerator Pedal Position (APP) sensor, replacement, 6-20
Camshaft Position (CMP) sensor, replacement, 6-15
catalytic converter, 6-25
crankcase ventilation system, 6-20
Crankshaft Position (CKP) sensor, replacement, 6-14
Engine Coolant Temperature (ECT) sensor, replacement, 6-14
evaporative emissions control system, 6-22
Exhaust Gas Recirculation (EGR) system, 6-21

Idle Air Control (IAC) valve, replacement, 6-19
Intake Air Temperature (IAT) sensor, replacement, 6-14
Knock sensor and module, replacement, 6-17
Manifold Absolute Pressure (MAP) sensor, replacement, 6-13
Mass Airflow (MAF) sensor, replacement, 6-13
On-Board Diagnostic (OBD) system and trouble codes, 6-3
oxygen sensor, replacement, 6-16
Powertrain Control Module (PCM), removal and installation, 6-11
Secondary Air Injection (AIR) system, 6-23
Throttle actuator control module, replacement, 6-20
Throttle Position Sensor (TPS), replacement, 6-12
Vehicle Speed Sensor (VSS), check and replacement, 6-18
ENGINE COOLANT TEMPERATURE (ECT) SENSOR, CHECK AND REPLACEMENT, 6-14
ENGINE COOLING FAN AND CLUTCH, CHECK AND REPLACEMENT, 3-4
ENGINE ELECTRICAL SYSTEMS, 5-1 THROUGH 5-16
alternator, removal and installation, 5-12
battery
cables, replacement, 5-5
check and replacement, 5-3
emergency jump starting, 0-17
charging system
check, 5-11
general information and precautions, 5-11
distributor (V6 models), removal and installation, 5-10
ignition coil and ignition control module (V6 models), removal and installation, 5-9
ignition coils (V8 models), removal and installation, 5-9
ignition system
check, 5-6
general information, 5-6
starter motor
and circuit, check, 5-13
removal and installation, 5-14
starting system, general information and precautions, 5-12
ENGINE OIL AND FILTER CHANGE, 1-11
ENGINES
4.3L V6 engine, 2A-1 through 2A-20
camshaft and lifters, removal and installation, 2A-15
crankshaft front oil seal, replacement, 2A-12
cylinder heads, removal and installation, 2A-9
exhaust manifolds, removal and installation, 2A-8
flywheel/driveplate, removal and installation, 2A-17
intake manifold, removal and installation, 2A-7
mounts, check and replacement, 2A-18
oil pan, removal and installation, 2A-16
oil pump, removal and installation, 2A-17
rear main oil seal, replacement, 2A-18
repair operations possible with the engine in the vehicle, 2A-2
rocker arms and pushrods, removal, inspection and installation, 2A-4
timing chain and sprockets, removal and installation, 2A-13
Top Dead Center (TDC), locating, 2A-2
valve covers, removal and installation, 2A-3
valve springs, retainers and seals, replacement, 2A-5
vibration damper and pulley, removal and installation, 2A-11
V8 engines, 2B-1 through 2B-24
camshaft and lifters, removal and installation, 2B-16
crankshaft
balancer, removal and installation, 2B-13
front oil seal, removal and installation, 2B-14
cylinder heads, removal and installation, 2B-11
exhaust manifolds, removal and installation, 2B-9
flywheel/driveplate, removal and installation, 2B-20
intake manifold, removal and installation, 2B-7
mounts, check and replacement, 2B-20
oil pan, removal and installation, 2B-17
oil pump, removal, inspection and installation, 2B-19
rear main oil seal, replacement, 2B-20
repair operations possible with the engine in the vehicle, 2B-2
rocker arms and pushrods, removal, inspection and installation, 2B-4
timing chain, removal, inspection and installation, 2B-14
Top Dead Center (TDC) for number one piston, locating, 2B-2
valve covers, removal and installation, 2B-3
valve springs, retainers and seals, replacement, 2B-6
general engine overhaul procedures, 2C-1 through 2C-38
balance shaft (V6 engines)
and bearings, removal and inspection, 2C-16
installation, 2C-28
block
cleaning, 2C-18
inspection, 2C-20
camshaft, lifters and bearings, removal and inspection, 2C-14
compression check, 2C-3
crankshaft
inspection, 2C-23
installation and main bearing oil clearance check, 2C-27
removal, 2C-17
cylinder head
cleaning and inspection, 2C-10
disassembly, 2C-9
reassembly, 2C-13
cylinder honing, 2C-21
engine overhaul
disassembly sequence, 2C-9
reassembly sequence, 2C-25
engine rebuilding alternatives, 2C-5
engine removal, methods and precautions, 2C-6
engine, removal and installation, 2C-6
initial start-up and break-in after overhaul, 2C-32
main and connecting rod bearings, inspection, 2C-24
oil pressure check, 2C-2
piston rings, installation, 2C-25
pistons/connecting rods
inspection, 2C-22
installation and rod bearing oil clearance check, 2C-30
removal, 2C-16
rear main oil seal and housing, installation, 2C-29
vacuum gauge diagnostic checks, 2C-4
valves, servicing, 2C-12

EVAPORATIVE EMISSIONS CONTROL SYSTEM, 6-22
EXHAUST GAS RECIRCULATION (EGR) SYSTEM, 6-21
EXHAUST GAS RECIRCULATION (EGR) VALVE INSPECTION, 1-34
EXHAUST MANIFOLDS, REMOVAL AND INSTALLATION
4.3L V6 engine, 2A-8
V8 engines, 2B-9
EXHAUST SYSTEM
check, 1-23
servicing, general information, 4-20
EXTENSION HOUSING OIL SEAL (2WD), REPLACEMENT, 7B-6

F

FILLING AND PAINTING, 11-4
FLUID LEVEL CHECKS
automatic transmission fluid, 1-10
battery electrolyte, 1-7
brake and clutch fluid, 1-8
engine coolant, 1-6
engine oil, 1-6
power steering fluid, 1-10
windshield washer fluid, 1-7
FLYWHEEL/DRIVEPLATE, REMOVAL AND INSTALLATION
4.3L V6 engine, 2A-17
V8 engines, 2B-20
FRONT AXLE SHIFT MOTOR (4WD MODELS), REPLACEMENT, 8-23
FRONT END ALIGNMENT, GENERAL INFORMATION, 10-26
FRONT FENDER, REMOVAL AND INSTALLATION, 11-11
FUEL
filter replacement, 1-25
pressure regulator, replacement, 4-15
system check, 1-20
temperature and oil pressure gauges, check, 12-10
FUEL AND EXHAUST SYSTEMS, 4-1 THROUGH 4-22
accelerator cable/Throttle Actuator Cable (TAC) system, replacement, 4-12
air filter housing, removal and installation, 4-11
exhaust system servicing, general information, 4-20
fuel injection system
check, 4-14
general information, 4-13
fuel level sending unit, replacement, 4-10
fuel meter body and injectors (V6 models), removal and installation, 4-16
fuel pressure relief procedure, 4-3
fuel pump module, removal and installation, 4-10
fuel rail and injectors (V8 models), removal and installation, 4-19
lines and fittings, repair and replacement, 4-5
pressure regulator, replacement, 4-15
pump/fuel pressure, check, 4-4
tank
cleaning and repair, general information, 4-9
removal and installation, 4-8
throttle body, removal and installation, 4-15
FUSES AND FUSIBLE LINKS, GENERAL INFORMATION, 12-4

G

GEAR BOOTS, STEERING, REPLACEMENT, 10-16
GEAR, STEERING, REMOVAL AND INSTALLATION, 10-18
GENERAL ENGINE OVERHAUL PROCEDURES, 2C-1 THROUGH 2C-38
balance shaft and bearings (V6 engines), removal and inspection, 2C-16
balance shaft (V6 engines), installation, 2C-28
block
cleaning, 2C-18
inspection, 2C-20
camshaft, lifters and bearings, removal and inspection, 2C-14
compression check, 2C-3
crankshaft
inspection, 2C-23
installation and main bearing oil clearance check, 2C-27
removal, 2C-17
cylinder head
cleaning and inspection, 2C-10
disassembly, 2C-9
reassembly, 2C-13
cylinder honing, 2C-21
engine overhaul
disassembly sequence, 2C-9
reassembly sequence, 2C-25
engine rebuilding alternatives, 2C-5
engine removal methods and precautions, 2C-6
initial start-up and break-in after overhaul, 2C-32
main and connecting rod bearings, inspection, 2C-24
oil pressure check, 2C-2
piston rings, installation, 2C-25
pistons/connecting rods
inspection, 2C-22
installation and rod bearing oil clearance check, 2C-30
removal, 2C-16
rear main oil seal and housing, installation, 2C-29
removal and installation, 2C-6
vacuum gauge diagnostic checks, 2C-4
valves, servicing, 2C-12

H

HEADLIGHT BULB, REPLACEMENT, 12-13
HEADLIGHT HOUSING, REPLACEMENT, 12-15
HEADLIGHTS AND FOG LIGHTS, ADJUSTMENT, 12-14
HEATER AND AIR CONDITIONING CONTROL ASSEMBLY, REMOVAL AND INSTALLATION, 3-11
HEATER CORE, REMOVAL AND INSTALLATION, 3-12
HINGES AND LOCKS, MAINTENANCE, 11-7
HOOD
latch and release cable, removal and installation, 11-9
removal, installation and adjustment, 11-8
HORN, CHECK AND REPLACEMENT, 12-20

HUB AND BEARING ASSEMBLY, REMOVAL AND INSTALLATION
front, 10-11
rear (full-floating axle), 8-12

I

IDLE AIR CONTROL (IAC) VALVE, REPLACEMENT, 6-19
IGNITION
coil and ignition control module (V6 models), removal and installation, 5-9
coils (V8 models), removal and installation, 5-9
switch and key lock cylinder, replacement, 12-8
system
check, 5-6
general information, 5-6
INITIAL START-UP AND BREAK-IN AFTER OVERHAUL, 2C-32
INSTRUMENT CLUSTER, REMOVAL AND INSTALLATION, 12-10
INSTRUMENT PANEL
and cowl support structure, removal and installation, 11-27
switches, replacement, 12-9
INTAKE AIR TEMPERATURE (IAT) SENSOR, REPLACEMENT, 6-14
INTAKE MANIFOLD, REMOVAL AND INSTALLATION
4.3L V6 engine, 2A-7
V8 engines, 2B-7
INTERIOR VENTILATION FILTER REPLACEMENT, 1-24
INTERMEDIATE SHAFT, REMOVAL AND INSTALLATION, 10-20
INTRODUCTION TO CHEVROLET SILVERADO/GMC SIERRA PICK-UPS & CHEVROLET TAHOE/SUBURBAN & GMC YUKON/YUKON XL SUVS, 0-5

J

JACKING AND TOWING, 0-16

K

KNOCK SENSOR AND MODULE REPLACEMENT, 6-17

L

LEAF SPRING, REMOVAL AND INSTALLATION, 10-14
LIFTGATE
and liftgate glass (SUV models), removal and installation, 11-20
panels, lock cylinder, latch and support struts (SUV models), removal and installation, 11-21
LINKAGE, STEERING, INSPECTION, REMOVAL AND INSTALLATION, 10-21
LOWER CONTROL ARM, REMOVAL AND INSTALLATION, 10-10

M

MAIN AND CONNECTING ROD BEARINGS, INSPECTION, 2C-24
MAINTENANCE
schedule, 1-4
techniques, tools and working facilities, 0-8
MANIFOLD ABSOLUTE PRESSURE (MAP) SENSOR, CHECK AND REPLACEMENT, 6-14
MANUAL TRANSMISSION, 7A-1 THROUGH 7A-6
back-up light switch, check and replacement, 7A-3
lubricant change, 1-33
lubricant level check, 1-23
overhaul, general information, 7A-4
removal and installation, 7A-3
shift lever and housing, removal and installation, 7A-2
MASS AIRFLOW (MAF) SENSOR, REPLACEMENT, 6-13
MASTER CYLINDER, REMOVAL, INSTALLATION AND RESERVOIR/O-RING REPLACEMENT, 9-11
MIRRORS, REMOVAL AND INSTALLATION, 11-18
MOUNTS, ENGINE, CHECK AND REPLACEMENT
4.3L V6 engine, 2A-18
V8 engines, 2B-20

O

OIL PAN, REMOVAL AND INSTALLATION
4.3L V6 engine, 2A-16
V8 engines, 2B-17
OIL PRESSURE CHECK, 2C-2
OIL PUMP, REMOVAL, INSPECTION AND INSTALLATION
4.3L V6 engine, 2A-17
V8 engines, 2B-19
ON-BOARD DIAGNOSTIC (OBD) SYSTEM AND TROUBLE CODES, 6-3
OXYGEN SENSOR, REPLACEMENT, 6-16

P

PARK/LOCK SYSTEM, DESCRIPTION AND COMPONENT REPLACEMENT, 7B-4
PARK/NEUTRAL POSITION (PNP) SWITCH/BACK-UP LIGHT SWITCH, CHECK, REPLACEMENT AND ADJUSTMENT, 7B-7
PARKING BRAKE
adjustment, 9-18
shoes, replacement, 9-19
pedal and cables, replacement, 9-18
PILOT BEARING, REPLACEMENT, 8-6
PINION OIL SEAL, REPLACEMENT, 8-15
PISTON RINGS, INSTALLATION, 2C-25
PISTONS/CONNECTING RODS
inspection, 2C-22
installation and rod bearing oil clearance check, 2C-30
removal, 2C-16

POSITIVE CRANKCASE VENTILATION (PCV) VALVE REPLACEMENT, 1-35
POWER BRAKE BOOSTER, CHECK, REMOVAL AND INSTALLATION, 9-16
POWER SEATS, DESCRIPTION AND CHECK, 12-25
POWER STEERING
fluid level check, 1-10
pump, removal and installation, 10-24
system, bleeding, 10-25
POWERTRAIN CONTROL MODULE (PCM), REMOVAL AND INSTALLATION, 6-11

R

RADIATOR AND COOLANT SURGE TANK, REMOVAL AND INSTALLATION, 3-5
RADIATOR GRILLE, REMOVAL AND INSTALLATION, 11-7
RADIO AND SPEAKERS, REMOVAL AND INSTALLATION, 12-11
REAR HUB, WHEEL BEARING AND SEAL (FULL-FLOATING AXLE), REMOVAL, BEARING/SEAL REPLACEMENT AND INSTALLATION, 8-14
REAR MAIN OIL SEAL AND HOUSING, INSTALLATION (DURING OVERHAUL), 2C-29
REAR MAIN OIL SEAL, REPLACEMENT (IN-VEHICLE)
4.3L V6 engine, 2A-18
V8 engines, 2B-20
REAR WINDOW DEFOGGER (SUV MODELS), CHECK AND REPAIR, 12-20
RELAYS, GENERAL INFORMATION AND TESTING, 12-4
REPAIR OPERATIONS POSSIBLE WITH THE ENGINE IN THE VEHICLE
4.3L V6 engine, 2A-2
V8 engines, 2B-2
RIGHT AXLESHAFT, TUBE, BEARING AND SHIFT FORK (4WD MODELS), REMOVAL, COMPONENT REPLACEMENT AND INSTALLATION, 8-23
ROCKER ARMS AND PUSHRODS, REMOVAL, INSPECTION AND INSTALLATION
4.3L V6 engine, 2A-4
V8 engines, 2B-4

S

SAFETY FIRST!, 0-22
SEAT BELT CHECK, 1-12
SEATS, REMOVAL AND INSTALLATION, 11-30
SECONDARY AIR INJECTION (AIR) SYSTEM, 6-23
SHIFT CABLE, REMOVAL, INSTALLATION AND ADJUSTMENT, 7B-2
SHIFT LEVER
and housing, removal and installation, 7A-1
removal and installation, (manual-shift models), 7C-2
SHIFT LINKAGE (MANUAL-SHIFT MODELS) , ADJUSTMENT, 7C-3
SHIFT MOTOR (ELECTRIC-SHIFT MODELS), REPLACEMENT, 7C-3
SHOCK ABSORBER, REMOVAL AND INSTALLATION
front, 10-5
rear, 10-13
SHOES, DRUM BRAKE, REPLACEMENT, 9-9
SPARK PLUG
replacement, 1-26
wires, distributor cap and rotor check and replacement, 1-35
SPEED SENSORS (ELECTRIC-SHIFT MODELS), CHECK AND REPLACEMENT, 7C-4
STABILIZER BAR AND BUSHINGS, REMOVAL AND INSTALLATION
front, 10-6
rear, 10-13
STARTER MOTOR
and circuit, check, 5-13
removal and installation, 5-14
STARTING SYSTEM, GENERAL INFORMATION AND PRECAUTIONS, 5-12
STEERING COLUMN
covers, removal and installation, 11-27
removal and installation, 10-18
switches, replacement, 12-7
STEERING KNUCKLE, REMOVAL AND INSTALLATION, 10-12
STEERING SYSTEM
alignment, general information, 10-26
intermediate shaft, removal and installation, 10-20
linkage, inspection, removal and installation, 10-21
power steering
pump, removal and installation, 10-24
system, bleeding, 10-25
steering column, removal and installation, 10-18
steering gear boots (2WD 1500 pick-up models), replacement, 10-21
steering gear, removal and installation, 10-23
steering wheel, removal and installation, 10-16
tie-rod ends, removal and installation, 10-20
wheels and tires, general information, 10-25
STUDS, WHEEL, REPLACEMENT, 10-10
SUSPENSION AND STEERING SYSTEMS, 10-1 THROUGH 10-30
SUSPENSION ARMS (REAR), REMOVAL AND INSTALLATION, 10-15
SUSPENSION SYSTEM
balljoints, check and replacement, 10-10
coil spring, removal and installation
front, 10-8
rear, 10-15
hub and bearing assembly (front), removal and installation, 10-11
leaf spring, removal and installation, 10-14
lower control arm, removal and installation, 10-10
shock absorber, removal and installation
front, 10-5
rear, 10-13

stabilizer bar and bushings, removal and installation
front, 10-6
rear, 10-13
steering knuckle, removal and installation, 10-12
suspension arms (rear), removal and installation, 10-15
torsion bar, removal and installation, 10-6
upper control arm, removal and installation, 10-9
Wheel studs, replacement, 10-12
SUSPENSION, STEERING AND DRIVEAXLE BOOT CHECK, 1-30

T

TAILGATE
latch and handle (pick-up models), removal and installation, 11-20
pick-up models, removal and installation, 11-19
THERMOSTAT, CHECK AND REPLACEMENT, 3-3
THROTTLE ACTUATOR CONTROL MODULE, REPLACEMENT, 6-20
THROTTLE BODY, REMOVAL AND INSTALLATION, 4-15
THROTTLE POSITION SENSOR (TPS), REPLACEMENT, 6-12
TIE-ROD ENDS, REMOVAL AND INSTALLATION, 10-16
TIMING CHAIN
and sprockets, removal and installation,4.3L V6 engine, 2A-13
removal, inspection and installation, V8 engines, 2B-14
TIRE AND TIRE PRESSURE CHECKS, 1-8
TIRE ROTATION, 1-18
TOOLS, 0-11
TOP DEAD CENTER (TDC) FOR NUMBER ONE PISTON, LOCATING
4.3L V6 engine, 2A-2
V8 engines, 2B-2
TORSION BAR, REMOVAL AND INSTALLATION, 10-6
TRANSFER CASE, 7C-1 THROUGH 7C-8
control module (electric-shift models), replacement, 7C-4
control switch (electric-shift models), replacement, 7C-3
lubricant
change (4WD models), 1-33
level check (4WD models), 1-24
oil seal, replacement, 7C-5
overhaul, general information, 7C-7
removal and installation, 7C-6
shift lever (manual-shift models), removal and installation, 7C-2
shift linkage (manual-shift models) , adjustment, 7C-3
shift motor (electric-shift models), replacement, 7C-3
speed sensors (electric-shift models), check and replacement, 7C-4
TRANSMISSION, AUTOMATIC, 7B-1 THROUGH 7B-12
diagnosis, general, 7B-2
extension housing oil seal (2WD), replacement, 7B-8
fluid and filter change, 1-32
fluid level check, 1-10
mount, check and replacement, 7B-8
Park/Lock system, description and component replacement, 7B-7
Park/Neutral Position (PNP) switch/back-up light switch, check, replacement and adjustment, 7B-6
removal and installation, 7B-9
shift cable, removal, installation and adjustment, 7B-3
TRANSMISSION, MANUAL, 7A-1 THROUGH 7A-6
back-up light switch, check and replacement, 7A-3
lubricant
change, 1-33
level check, 1-23
overhaul, general information, 7A-4
removal and installation, 7A-3
shift lever and housing, removal and installation, 7A-2
TROUBLESHOOTING, 0-23
TUNE-UP AND ROUTINE MAINTENANCE, 1-1 THROUGH 1-40
TUNE-UP GENERAL INFORMATION, 1-5
TURN SIGNAL AND HAZARD FLASHERS, CHECK AND REPLACEMENT, 12-7

U

UNDERHOOD HOSE CHECK AND REPLACEMENT, 1-16
UNIVERSAL JOINTS, REPLACEMENT, 8-9
UPHOLSTERY AND CARPETS, MAINTENANCE, 11-2
UPPER CONTROL ARM, REMOVAL AND INSTALLATION, 10-9

V

V6 ENGINE, 2A-1 THROUGH 2A-20
camshaft and lifters, removal and installation, 2A-15
crankshaft front oil seal, replacement, 2A-12
cylinder heads, removal and installation, 2A-9
exhaust manifolds, removal and installation, 2A-8
flywheel/driveplate, removal and installation, 2A-17
intake manifold, removal and installation, 2A-7
mounts, check and replacement, 2A-18
oil pan, removal and installation, 2A-16
oil pump, removal and installation, 2A-17
rear main oil seal, replacement, 2A-18
repair operations possible with the engine in the vehicle, 2A-2
rocker arms and pushrods, removal, inspection and installation, 2A-4
timing chain and sprockets, removal and installation, 2A-13
Top Dead Center (TDC), locating, 2A-2
valve covers, removal and installation, 2A-3
valve springs, retainers and seals, replacement, 2A-5
vibration damper and pulley, removal and installation, 2A-11
V8 ENGINES, 2B-1 THROUGH 2B-24
camshaft and lifters, removal and installation, 2B-16
crankshaft balancer, removal and installation, 2B-13
crankshaft front oil seal, removal and installation, 2B-14
cylinder heads, removal and installation, 2B-11
exhaust manifolds, removal and installation, 2B-9
flywheel/driveplate, removal and installation, 2B-20
intake manifold, removal and installation, 2B-7
mounts, check and replacement, 2B-20
oil pan, removal and installation, 2B-17
oil pump, removal, inspection and installation, 2B-19

rear main oil seal, replacement, 2B-20
repair operations possible with the engine in the vehicle, 2B-2
rocker arms and pushrods, removal, inspection and installation, 2B-4
timing chain, removal, inspection and installation, 2B-14
Top Dead Center (TDC) for number one piston, locating, 2B-2
valve covers, removal and installation, 2B-3
valve springs, retainers and seals, replacement, 2B-6
VACUUM GAUGE DIAGNOSTIC CHECKS, 2C-4
VALVE COVERS, REMOVAL AND INSTALLATION
4.3L V6 engine, 2A-3
V8 engines, 2B-3
VALVE SPRINGS, RETAINERS AND SEALS, REPLACEMENT
4.3L V6 engine, 2A-5
V8 engines, 2B-6
VALVES, SERVICING, 2C-12
VEHICLE IDENTIFICATION NUMBERS, 0-6
VEHICLE SPEED SENSOR (VSS), REPLACEMENT, 6-18
VIBRATION DAMPER AND PULLEY, REMOVAL AND INSTALLATION
4.3L V6 engine, 2A-11
VINYL TRIM, MAINTENANCE, 11-2

W

WATER PUMP, CHECK AND REPLACEMENT, 3-7
WHEEL BEARING AND HUB ASSEMBLY, REMOVAL AND INSTALLATION, 10-10
front, 10-10
rear (full-floating axle), 8-12
WHEEL CYLINDER, REMOVAL AND INSTALLATION, 9-12
WHEEL, STEERING, REMOVAL AND INSTALLATION, 10-13
WHEEL STUDS, REPLACEMENT, 10-12
WHEELS AND TIRES, GENERAL INFORMATION, 10-20
WINDOW SYSTEM, POWER, DESCRIPTION AND CHECK, 12-23
WINDSHIELD AND FIXED GLASS, REPLACEMENT, 11-7
WIPER BLADE INSPECTION AND REPLACEMENT, 1-13
WIPER MOTOR, CHECK AND REPLACEMENT, 12-19
WIRING DIAGRAMS, GENERAL INFORMATION, 12-28
WORKING FACILITIES, 0-15

CHILTON'S

Total Car Care™

...For The Do-It-Yourselfer

Total Car Care is the most complete, step-by-step automotive repair manual you'll ever use. All repair procedures are supported by detailed specifications, exploded views, and photographs.

Here are just a few of the items in this manual that make your repair jobs easier:

- **Expanded index to quickly locate information**
- **Wiring diagrams**
- **Troubleshooting**
- **A glossary to identify those unfamiliar terms**

From the simplest repair procedure to the most complex, trust Chilton's Total Car Care to give you everything you need to do the job.

Save time and money by doing it yourself, with the confidence only a Chilton Repair Manual can provide.

Does not include 1999 and 2000 C/K Classic, 1999 and 2000 Sierra Classic, or information specific to diesel engine models, 8.1L engine models, CNG models, hybrids, models equipped with rear-wheel steering or heavy-duty models

799-2977

UPC 0 35675 28625 1

•General Information •Routine Maintenance & Tune-Up •Engine & Engine Overhaul •Driveability & Emission Controls •Trouble Codes & Diagnostics •Fuel System •Chassis Electrical •Drive Train •Suspension & Steering •Brakes •Body •Glossary

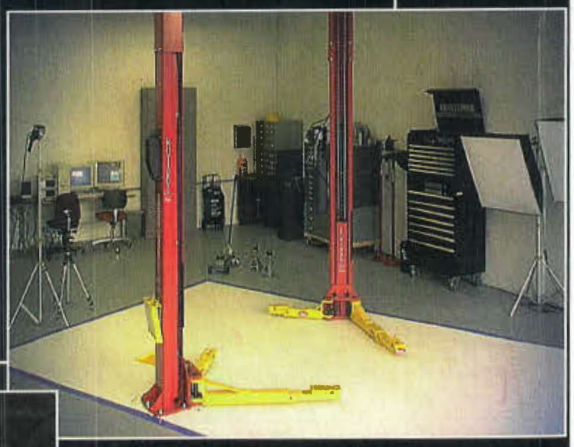

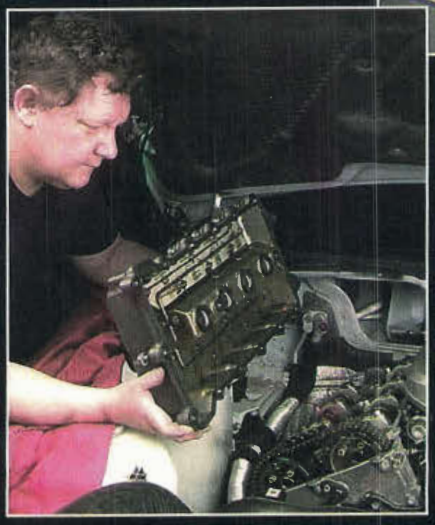

ISBN-13: 978-1-56392-686-0

ISBN 1-56392-686-5

EAN 90000 9 781563 926860