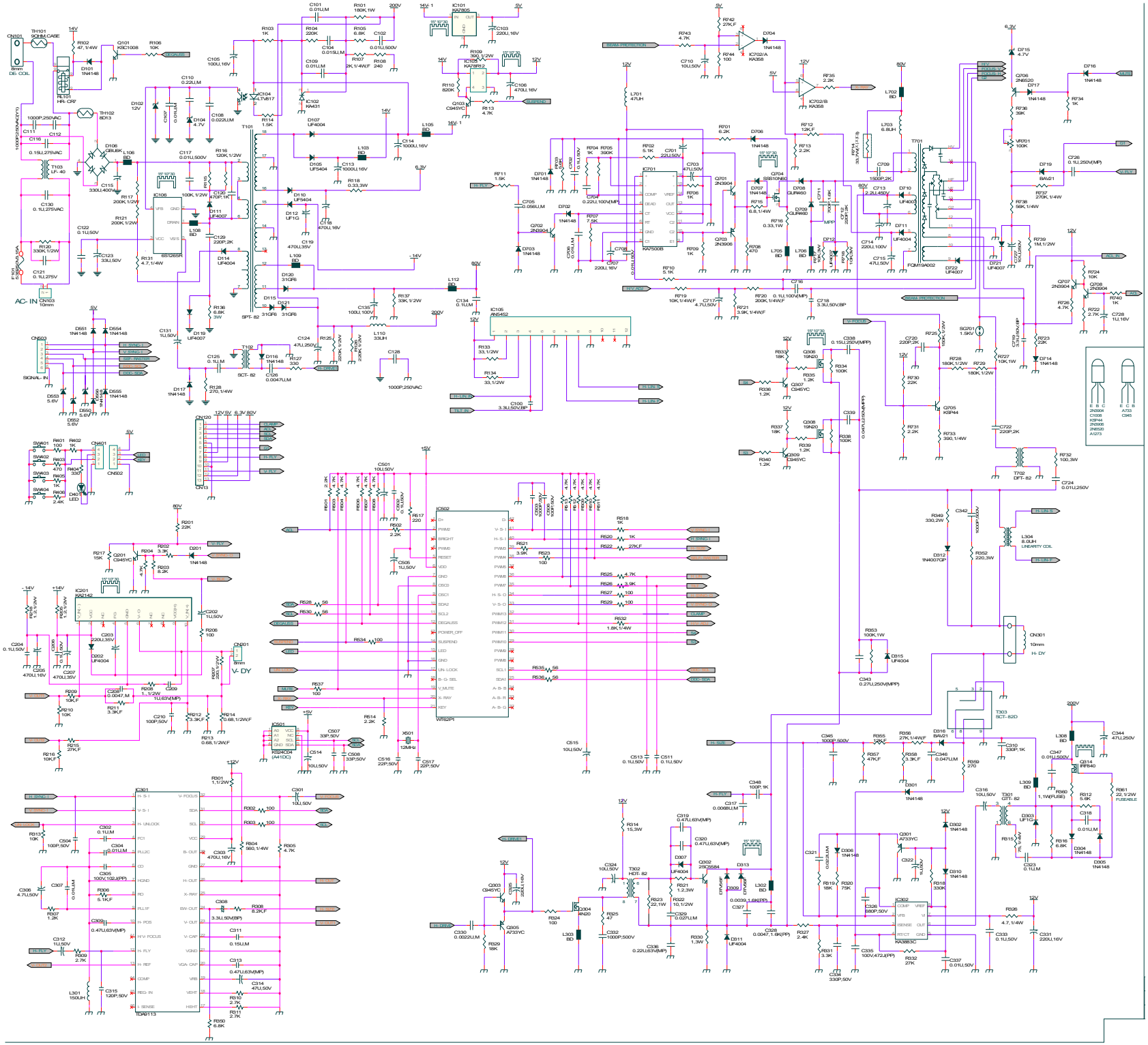
AC- IN
SIGNAL- IN
V- DY
H- DY
LINEARITY COIL
FUSEABLE
IC101 KA7805
IC105 AN5452
IC106 6S1265R
IC302 KA3843C
IC501 KS24C04 (A41DC)
IC502 WT62PI
IC601 TDA6113
IC701 KA7500B
IC702/A KA358
IC702/B KA358
T101 SPT- 82
T102 SCT- 82
T301 GTT- 82
T302 HDT- 82
T303 SCT-82D
T701 PQM19A002
T702 DFT- 82

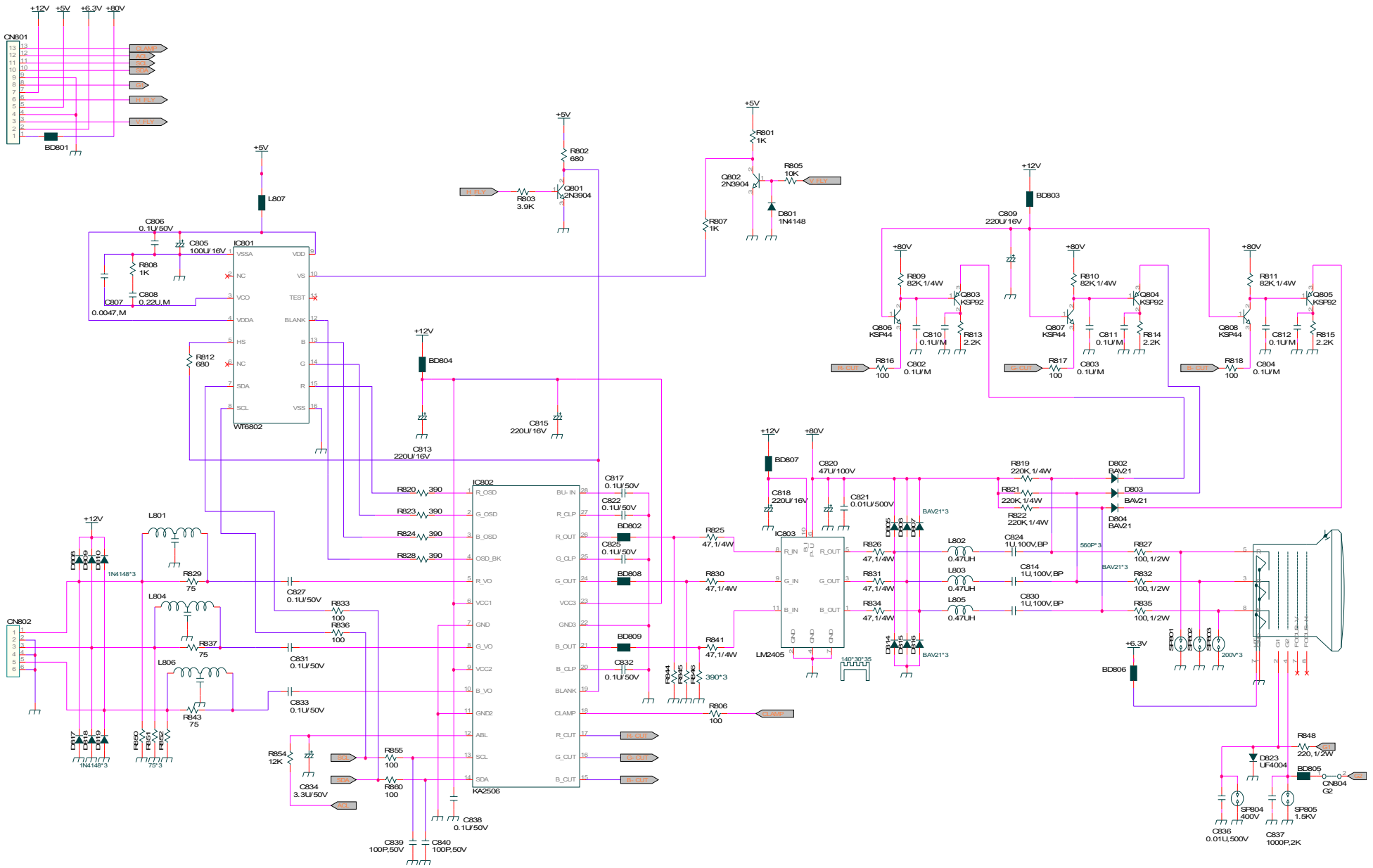
CN801
+12V
+5V
+6.3V
+80V
BD801
CLAMP
AC
SCL
SDA
CS
H_BLK
V_BLK
L807
C806 0.1U/50V
C805 100U/16V
IC801
VSSA
NC
VCO
VDDA
HS
NC
SDA
SCL
VDD
VS
TEST
BLANK
B
G
R
VSS
WT6802
R808 1K
C808 0.22U,M
C807 0.0047,M
R812 680
R802 680
R803 3.9K
Q801 2N3904
R801 1K
Q802 2N3904
R805 10K
D801 1N4148
R807 1K
BD803
C809 220U/16V
R809 82K,1/4W
R810 82K,1/4W
R811 82K,1/4W
Q803 KSP92
Q804 KSP92
Q805 KSP92
Q806 KSP44
Q807 KSP44
Q808 KSP44
C810 0.1U/M
C811 0.1U/M
C812 0.1U/M
R813 2.2K
R814 2.2K
R815 2.2K
R816 100
R817 100
R818 100
R-OUT
G-OUT
B-OUT
C802 0.1U/M
C803 0.1U/M
C804 0.1U/M
BD804
C813 220U/16V
C815 220U/16V
IC802
R_OSD
G_OSD
B_OSD
OSD_BK
R_VO
VCC1
GND
G_VO
VCC2
B_VO
GND2
ABL
SCL
SDA
BU- IN
R_CLP
R_OUT
G_CLP
G_OUT
VCC3
GND3
B_OUT
B_CLP
BLANK
CLAMP
R_OUT
G_OUT
B_OUT
KA2506
R820 390
R823 390
R824 390
R828 390
C817 0.1U/50V
C822 0.1U/50V
BD802
C825 0.1U/50V
BD808
BD809
C832 0.1U/50V
R825 47,1/4W
R830 47,1/4W
R841 47,1/4W
R844
R845
R846
390*3
R806 100
BD807
C818 220U/16V
C820 47U/100V
C821 0.01U/500V
IC803
R_IN
G_IN
B_IN
BU
R_OUT
G_OUT
B_OUT
GND
LM2405
140*30*35
D805
D806
D814
D815
BAV21*3
R826 47,1/4W
R831 47,1/4W
R834 47,1/4W
L802 0.47UH
L803 0.47UH
L805 0.47UH
C824 1U,100V,BP
C814 1U,100V,BP
C830 1U,100V,BP
R819 220K,1/4W
R821 220K,1/4W
R822 220K,1/4W
D802 BAV21
D803 BAV21
D804 BAV21
560P*3
R827 100,1/2W
R832 100,1/2W
R835 100,1/2W
BD806
SP801
SP802
SP803
200V*3
CN802
L801
L804
L806
R829 75
R837 75
R843 75
C827 0.1U/50V
C831 0.1U/50V
C833 0.1U/50V
R833 100
R836 100
D808
D809
D810
D817
D818
D819
1N4148*3
R850
R851
R852
75*3
R854 12K
C834 3.3U/50V
R855 100
R860 100
C838 0.1U/50V
C839 100P,50V
C840 100P,50V
R848 220,1/2W
D823 UF4004
BD805
CN804
G2
SP804 400V
SP805 1.5KV
C836 0.01U,500V
C837 1000P,2K